View from De Anza Boulevard

SYMBOLS

- GRID LINES, ALIGNMENT is to EXTERIOR FACE of STUD UNLESS OTHERWISE NOTED
- 101 — DOOR TAG
- 1t — WINDOW TAG
- DATUM POINT
- BUILDING SECTION VIEW, VIEW and SHEET NUMBERS
- WALL SECTION VIEW, VIEW and SHEET NUMBERS
- 1 — REVISION
- 1 / A101 SIM — DETAIL REFERENCE, VIEW and SHEET NUMBERS
- ℄ — CENTER LINE
- Room name / 101 — ROOM NAME, ROOM NUMBER
- ENLARGED DRAWING AREA REFERENCE
- 4'-0" +/- — DIMENSIONS - FACE of STUD, GRID LINE, and/or as NOTED

BUILDING CODES

APPLICABLE BUILDING CODES

2016 California Building Codes
CCR Title 24, Parts 2-6, Part 9, and Part 11

Applicable Local Ordinances, Regulations, and Amendments

ABBREVIATIONS

ACOUS	ACOUSTICAL
ADJ	ADJUSTABLE
AFES	AUTOMATIC FIRE EXTINGUISHING SYSTEM
AFF	ABOVE FINISHED FLOOR
AHU	AUTHORITY HAVING JURISDICTION
ALUM	ALUMINUM
APPRX	APPROXIMATE
BLDG	BUILDING
BoB	BOTTOM of BEAM
CC	CENTER to CENTER
CLG	CEILING
D	DEPTH
DET	DETAIL
DIA	DIAMETER
DIM	DIMENSION
DS	DOWNSPOUT
EA	EACH
(E)	EXISTING
EMR	ELEVATOR MACHINE ROOM
EQ	EQUAL
EXT	EXTERIOR
FA	FIRE ALARM
FBRGLS	FIBERGLASS
FDC	FIRE DEPARTMENT CONNECTION
FE	FIRE EXTINGUISHER
FEC	FIRE EXTINGUISHER CABINET
FF	FINISHED FLOOR
FH	FIRE HOSE, FIRE HYDRANT
FHC	FIRE HOSE CABINET
FLR	FLOOR
FLOUR	FLOURESCENT
FoC	FACE of CONCRETE
FoF	FACE of FINISH
FoS	FACE of STUD
FS	FIRE SPRINKLER
GA	GAGE, GAUGE
GALV	GALVANIZED
GI	GALVANIZED IRON
GWB	GYPSUM WALL BOARD
H, HT	HEIGHT
HM	HOLLOW METAL
IGU	INSULATED GLAZING UNIT
INT	INTERIOR
JST	JOIST
LAV	LAVATORY
LED	LIGHT EMITTING DIODE
MAX	MAXIMUM
MB	MACHINE BOLT
MTL	METAL
MFR	MANUFACTURER
MIN	MINIMUM
MISC	MISCELLANEOUS
(N)	NEW
NIC	NOT IN CONTRACT
NO., #	NUMBER
NTS	NOT TO SCALE
OC	ON CENTER
OF	OVERFLOW
OFL	OVERFLOW LEADER
PDF	POWER DRIVEN FASTENERS
PNL	PANEL
R	RADIUS
RD	ROOF DRAIN
REQ'D	REQUIRED
REM	REMOVE, REMOVED
RF	ROOF
RM	ROOM
R&R	REMOVE and REPLACE
RWL	RAIN WATER LEADER
SAF	SELF ADHERING FLASHING
SASM	SELF ADHERING SHEET MEMBRANE
SCD	SEE CIVIL DRAWINGS
SED	SEE ELECTRICAL DRAWINGS
SLD	SEE LANDSCAPE DRAWINGS
SIM	SIMILAR
SMD	SEE MECHANICAL DRAWINGS
SPD	SEE PLUMBING DRAWINGS
SPPD	SEE PROCESS PIPING DRAWINGS
SPEC	SPECIFICATIONS
SS	STAINLESS STEEL
SSD	SEE STRUCTURAL DRAWINGS
STD	STANDARD
STOR	STORAGE
STS	SELF TAPPING SCREW
STSMS	SELF TAPPING SHEET METAL SCREW
SUSP	SUSPENDED
TBD	TO BE DETERMINED
TBR	TO BE REMOVED
TBRL	TO BE RELOCATED
TBS	TO BE SELECTED
TEL	TELEPHONE
TEMP	TEMPERED, TEMPORARY
ToC, TC	TOP of CONCRETE
TFF	TOP of FINISH FLOOR
ToS,TS	TOP of SLAB
ToW,TW	TOP of WALL
TYP	TYPICAL
UON	UNLESS OTHERWISE NOTED
VCT	VINYL COMPOSITION TILE
VIF	VERIFY IN FIELD
W	WIDTH, WIDE
WC	WATER CLOSET
WD	WOOD
WG	WIRE GLASS
ZN	ZINC

PROJECT DATA

SCOPE of WORK

Construct a new 6 story hotel with 4 underground levels of parking and hotel services area

ADDRESS	10931 N Anza Blvd, Cupertino, CA 95014
APN	160-55-015, 016
SITE AREA, NET	56287sf, 1.29 Acres
BUILDING FOOTPRINT	28702sf
BUILDING COVERAGE	51%

BUILDING AREAS

Conference/Meeting	4242sf
Restaurant, Bar and Kitchen	4239sf (2259sf Restaurant and Bar)
Building Area (Enclosed)	128,610sf
Garage Area	87,708sf
Floor Area Ratio (FAR)	2.28
Number of Stories	6 (Above Grade)
Number of Stories	4 (Below Grade)
Number of Guest Rooms	155

CONSTRUCTION

Type	1A
Fire Sprinklers	Yes
Occupancy Types	R1 (Guest Rooms), A2 (Restaurant), A3 (Conference), S2 (Garage)

PARKING SUMMARY

Required	1 per Room (155) 1 per Employee (20), Restaurant 1 per 4 patrons (25)(200 Required
Provided	Garage (200), On Grade (11), 211 Total (7) Accessible Stalls required, (7) provided

PROJECT DIRECTORY

OWNER

De Anza Properties
960 N San Antonio Road
Los Altos, CA
Jeremy Haggberg
408-221-2068
jhaggberg@deanzaproperties.com

DESIGNER

Winkleman Designs
1795 Amaya Ridge Rd
Soquel, CA 95073
Bill Winkleman
408-353-6700
bill@winklemandesigns.com

CIVIL ENGINEER

JMH Weiss, Inc
1731 Technology Drive, Suite 880
San Jose, CA 95110
DJ Edwards
408-286-4555
djedwards@jmhweiss.com

LANDSCAPE ARCHITECT

The Guzzardo Partnership
181 Greenwich Street
San Francisco, CA 94111
Paul Lettieri
415-433-4672
p.lettieri@tgp-inc.com

DRAWING INDEX

ARCHITECTURAL

A0.00	Cover Sheet
A1.00	Site Plan
A1.01	Site and 1st Floor Plan
A2.0-GL1	Garage Level 1 Plan
A2.0-GL2	Garage Level 2 Plan
A2.0-GL3	Garage Level 3 Plan
A2.0-GL4	Garage Level 4 Plan
A2.0-Mids	Garage Levels 1.5, 2.5, 3.5
A2.01	First Floor Plan
A2.02	Second Floor Plan
A2.03	Third Floor Plan
A2.04	Roof Plan
A5.00	Exterior Elevations
A5.01	Exterior Elevations
A5.10	Building Sections
A5.11	Building Sections
A5.12	Building Section
A5.13	Building Section
A5.14	Building Section
A5.15	Building Section
A11.05n	North View Evening

CIVIL

C1.0	Existing Conditions
C1.1	Fire Hydrant Site Plan
C2.0	Conceptual Grading, Drainage and Utility Plan
C3.0	Conceptual Stormwater Management Plan 2nd Floor
C3.1	Conceptual Stormwater Management Plan 1st Floor
C3.2	Stormwater Management Notes & Details

LANDSCAPE

L1	Streetscape Conceptual Plan
L2	Notes and Specifications
L3	Landscape Imagery
L4	Tree Disposition Plan

EXTERIOR VIEWS (11x17)

11.00	East View
11.00n	East View Evening
11.01	SE View
11.01n	SE View Evening
11.02	South View
11.03	West View
11.04	NW View
11.05	North View
11.06	NE View
11.07	Materials Board

LOCATION MAP

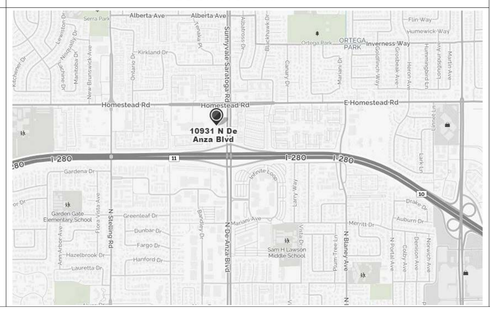

Winkleman Designs
1795 Amaya Ridge Road
Soquel, CA 95073
Tel 408-353-6700
Fax 408-353-4729

bill@winklemandesigns.com

All drawings and written material appearing herein constitute original and unpublished work of the Designer and may not, without written consent of the Designer, be duplicated, used, or disclosed in whole or in part for design, fabrications, or construction of any building, structure, or improvement, or portion thereof, other than the specific project for which it pertains.

The De Anza
De Anza Properties
10931 N De Anza Blvd, Cupertino, CA

The De Anza
10931 N De Anza Blvd
Cupertino, CA

for

De Anza Properties

PLANNING SUBMITTAL
November 13, 2018

Cover Sheet

REVISIONS

No.	Date	Description

Date: 11/13/18
Sheet Date: 6/18/18
Scale: 12" = 1'-0"
Drawn: W
Job: 17200
Sheet: A0.00

© Winkleman Designs 2018

C:\Users\Bill\Documents\DeAnza\17200_DRN_A Story_v5_bill@winklemandesigns.com.rvt
11/12/2018 1:57:03 PM

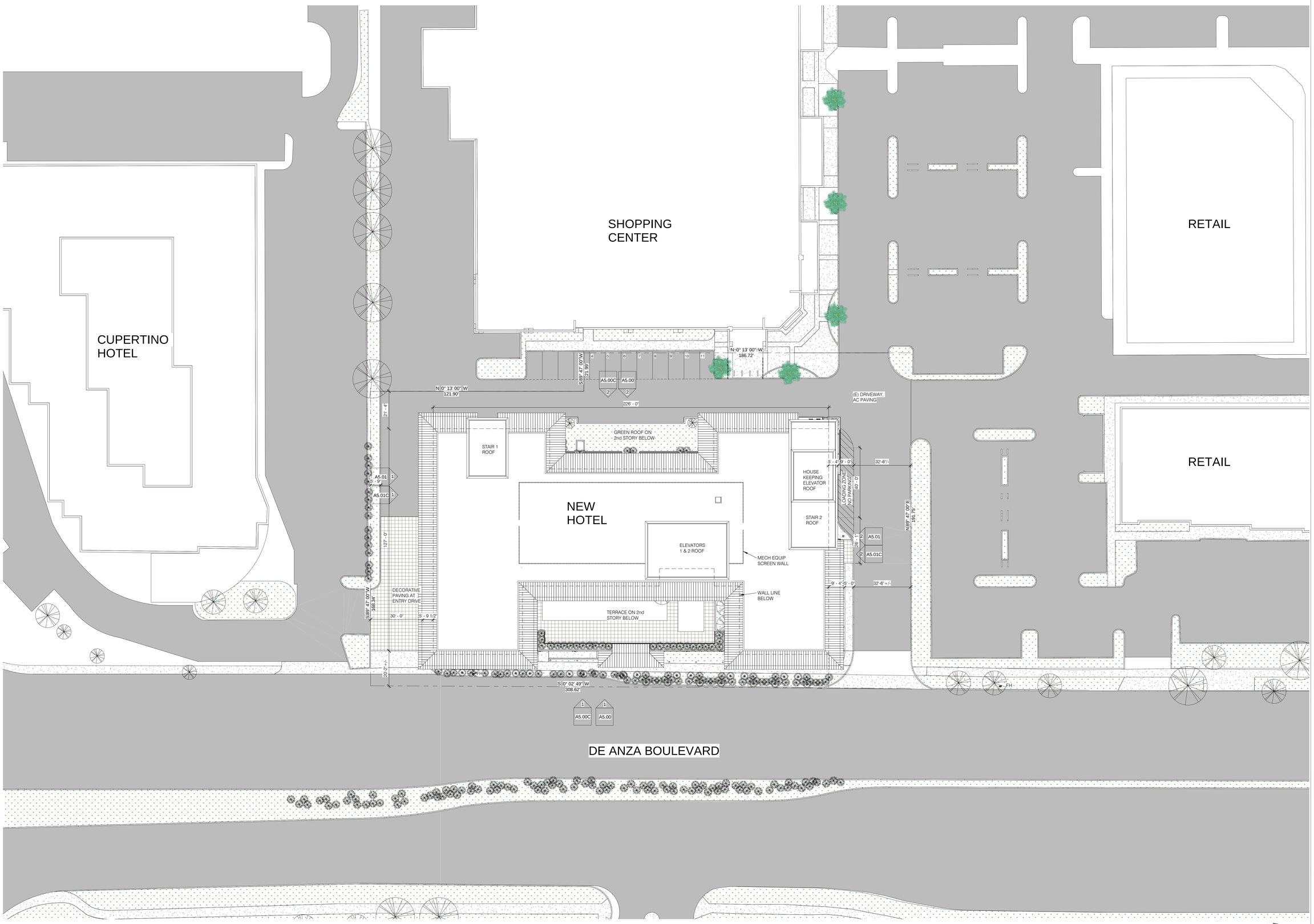

Winkleman Designs
1795 Amaya Ridge Road
Soquel, CA 95073
Tel 408-353-6700
Fax 408-353-4729
bill@winklemandesigns.com

All drawings and written material appearing herein constitute original and unpublished work of the Designer and may not, without written consent of the Designer, be duplicated, used, or disclosed in whole or in part for design, fabrications, or construction of any building, structure, or improvement, or portion thereof, other than the specific project to which it pertains.

The De Anza

De Anza Properties

10931 N De Anza Blvd, Cupertino, CA

Site Plan

REVISIONS

No.	Date	Description

Date	11/13/18
Sheet Date	6/18/18
Scale	1" = 20'-0"
Drawn	W
Job	17200
Sheet	A1.00

© Winkleman Designs 2018

C:\Users\Bill\Documents\DAH-CEN18_GPA_5 Story_v5_bill@winklemandesigns.com.rvt

11/12/2018 1:57:36 PM

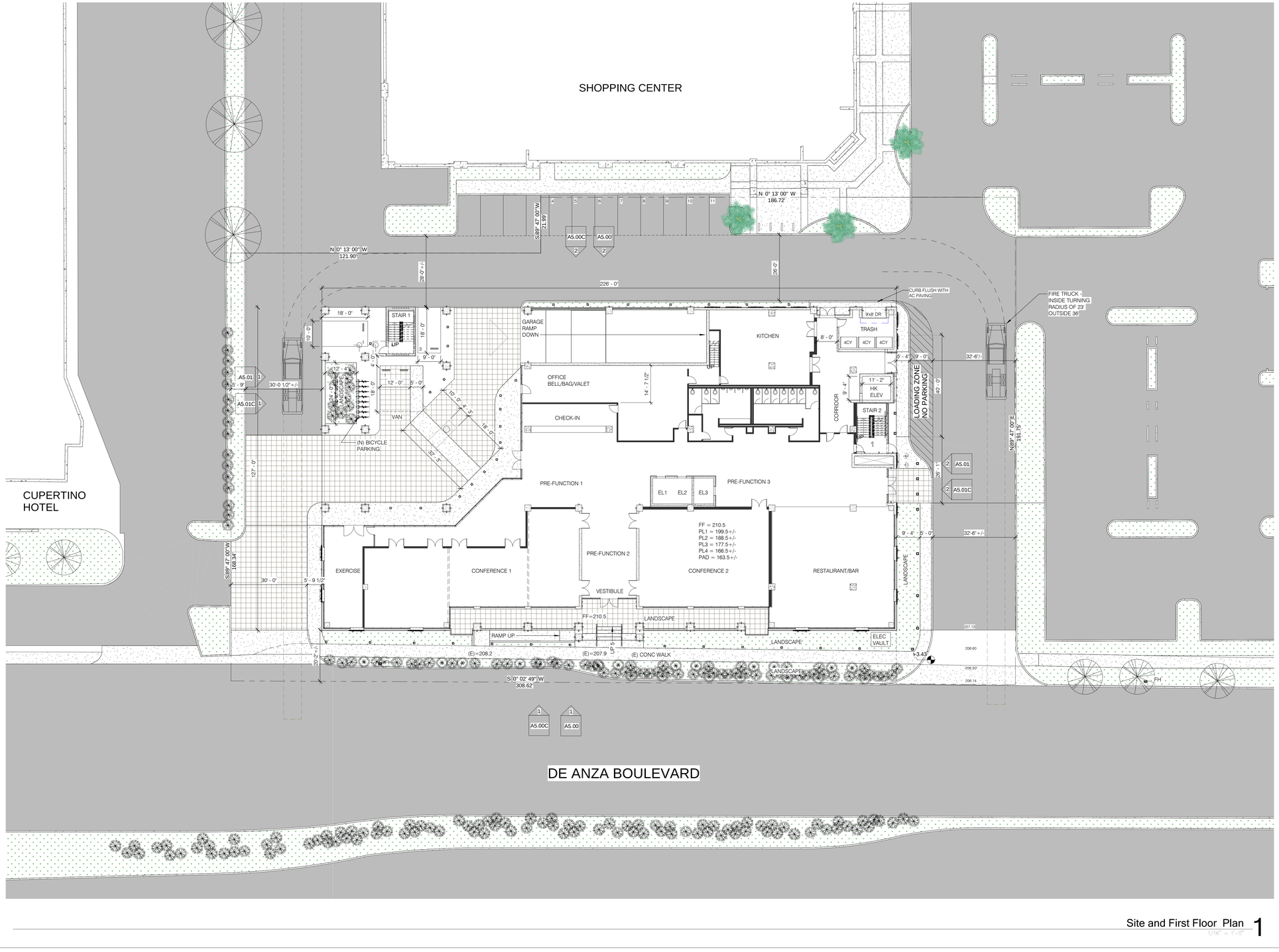

Site and First Floor Plan 1

1/16" = 1'-0"

Winkleman Designs
1795 Amaya Ridge Road
Soquel, CA 95073
Tel 408-353-6700
Fax 408-353-4729
bill@winklemandesigns.com

All drawings and written material appearing herein constitute original and unpublished work of the Designer and may not, without written consent of the Designer, be duplicated, used, or disclosed in whole or in part for design, fabrications, or construction of any building, structure, or improvement, or portion thereof, other than the specific project to which it pertains.

The De Anza
De Anza Properties
10931 N De Anza Blvd, Cupertino, CA

Site and 1st Floor Plan

REVISIONS

No.	Date	Description

Date	11/13/18
Sheet Date	10/9/18
Scale	1/16" = 1'-0"
Drawn	Author
Job	17200
Sheet	A1.01

© Winkleman Designs 2018

C:\Users\Bill\Documents\CAH-CEN18_GPA_5 Story_v5_bill@winklemandesigns.com.rvt
11/12/2018 2:53:30 PM

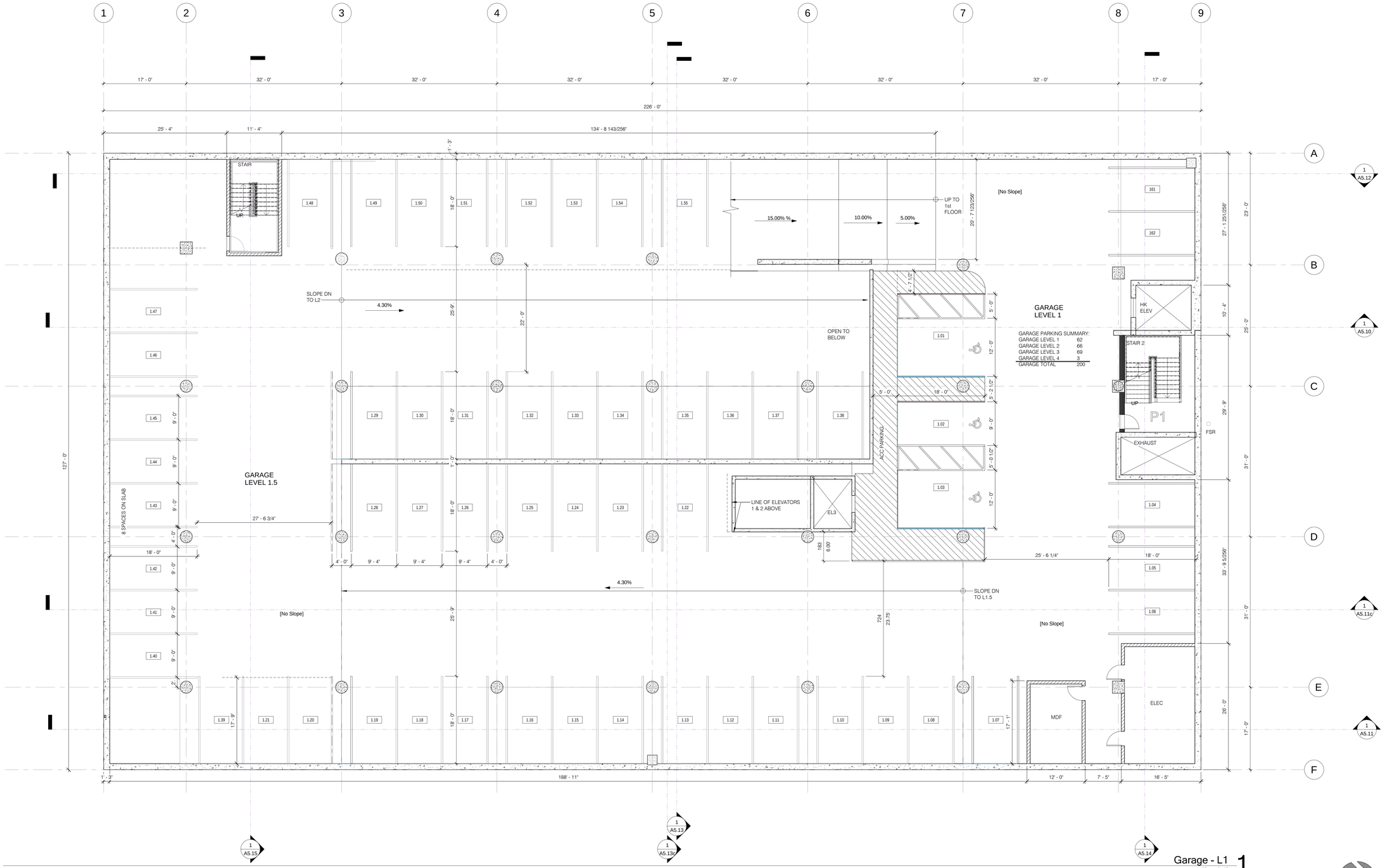

Garage - L1 1
1/8" = 1'-0"

Winkleman Designs
1795 Amaya Ridge Road
Soquel, CA 95073
Tel 408-353-6700
Fax 408-353-4729
bill@winklemandesigns.com

All drawings and written materials appearing herein constitute original and unpublished work of the Designer and may not, without written consent of the Designer, be duplicated, used, or disclosed in whole or in part for design, fabrications, or construction of any building, structure, or improvement, or portion thereof, other than the specific project to which it pertains.

The De Anza
De Anza Properties
10931 N De Anza Blvd, Cupertino, CA

Garage Level 1 Plan

REVISIONS

No.	Date	Description

Date: 11/13/18
Sheet Date: 6/18/18
Scale: 1/8" = 1'-0"
Drawn: Author
Job: 17200
Sheet: A2.0-GL1

© Winkleman Designs 2018

C:\Users\Bill\Documents\DeAnza\17200_A_Elev_v5_bill@winklemandesigns.com.rvt
11/12/2018 1:59:12 PM

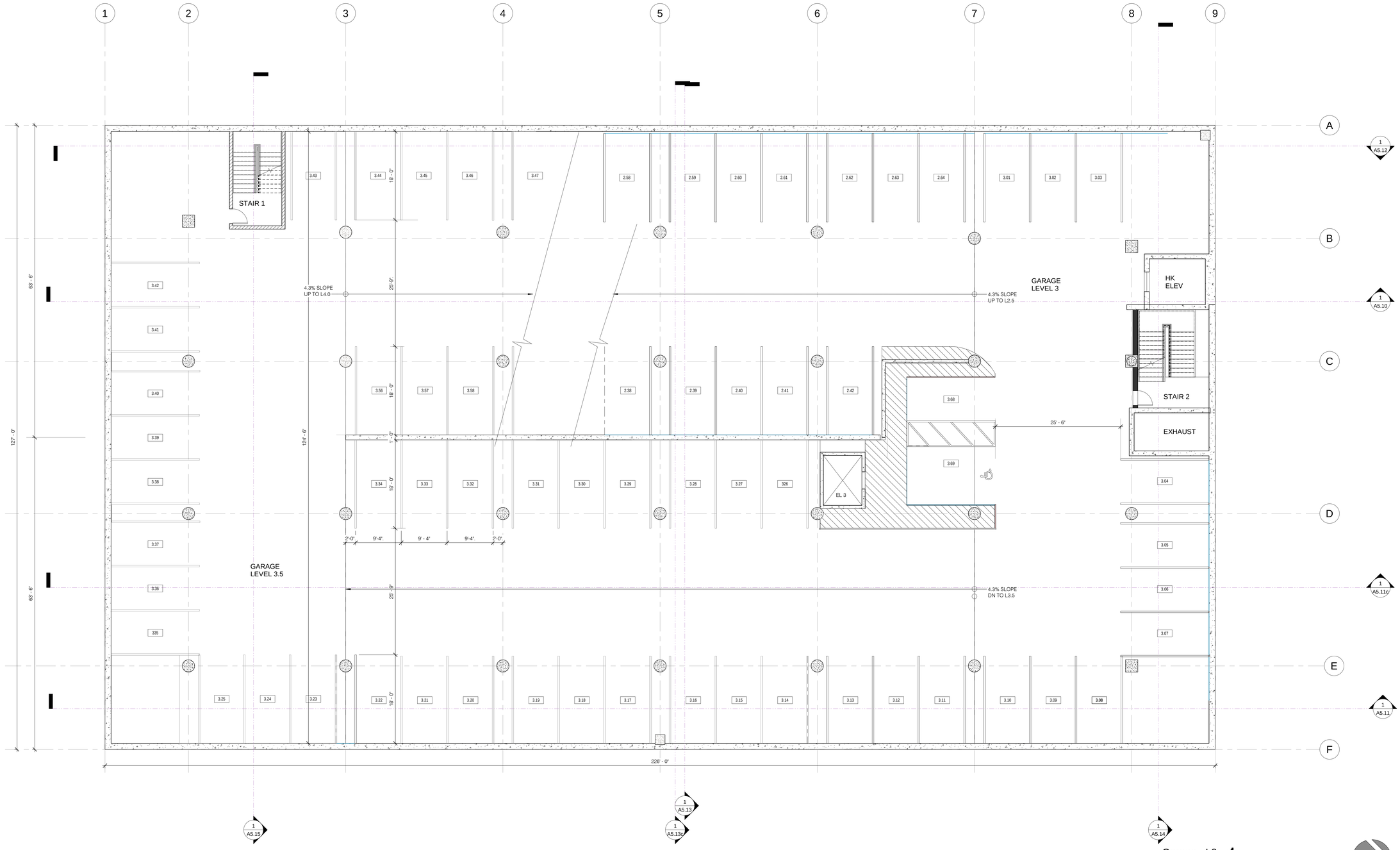

Garage - L3 1

1/8" = 1'-0"

Winkleman Designs
1795 Amaya Ridge Road
Soquel, CA 95073
Tel 408-353-6700
Fax 408-353-4729
bill@winklemandesigns.com

All drawings and written material appearing herein constitute original and unpublished work of the Designer and may not, without written consent of the Designer, be duplicated, used, or disclosed in whole or in part for design, fabrications, or construction of any building, structure, or improvement, or portion thereof, other than the specific project to which it pertains.

The De Anza

De Anza Properties

10931 N De Anza Blvd, Cupertino, CA

Garage Level 3 Plan

REVISIONS

No.	Date	Description

Date	11/13/18
Sheet Date	6/18/18
Scale	1/8" = 1'-0"
Drawn	Author
Job	17200
Sheet	A2.0-GL3

© Winkleman Designs 2018

C:\Users\Bill\Documents\CAH-CEN18_GPA_5 Story_v5_bill@winklemandesigns.com.rvt

11/12/2018 1:59:52 PM

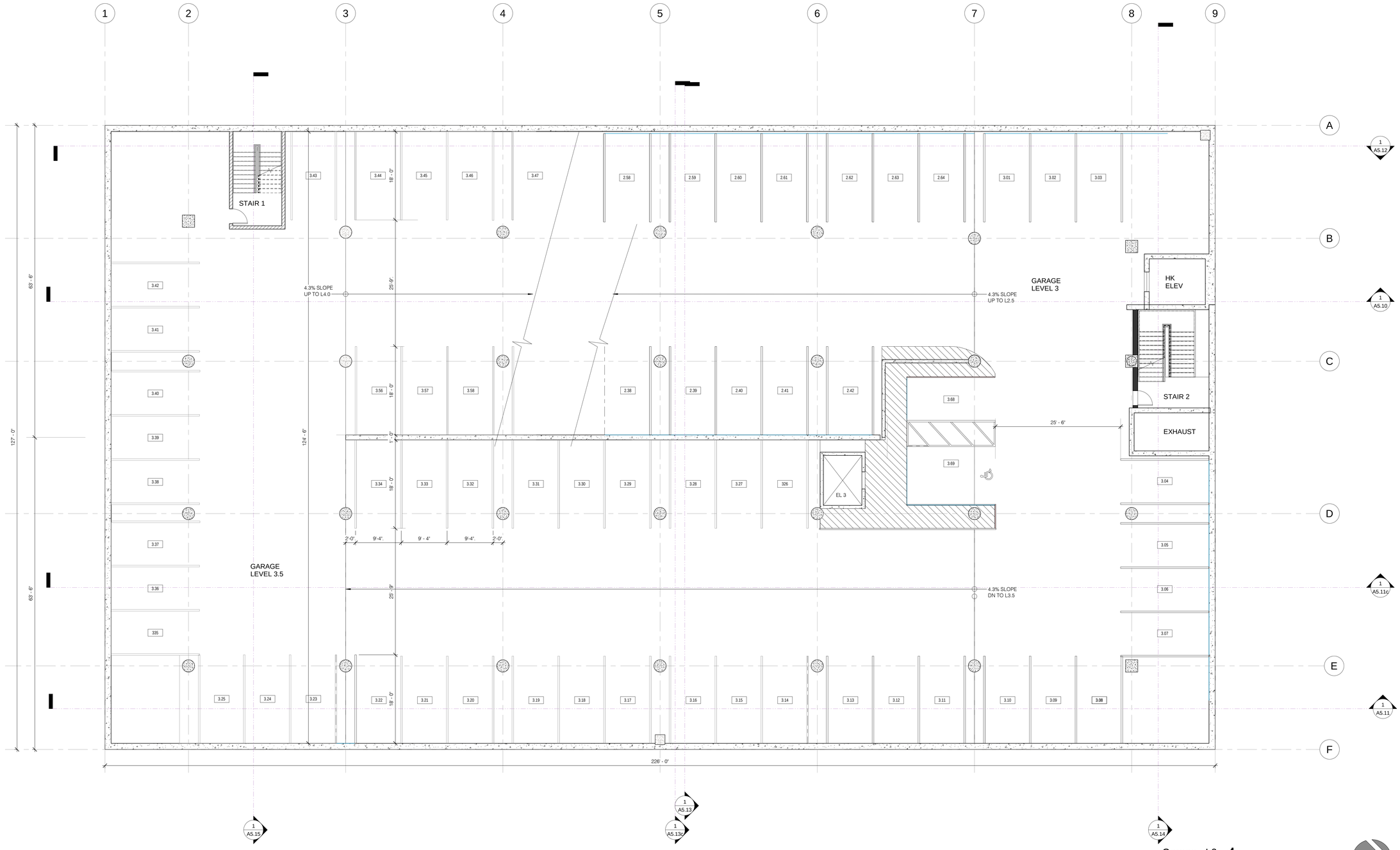

Garage - L3 1
1/8" = 1'-0"

Winkleman Designs
1795 Amaya Ridge Road
Soquel, CA 95073
Tel 408-353-6700
Fax 408-353-4729
bill@winklemandesigns.com

All drawings and written material appearing herein constitute original and unpublished work of the Designer and may not, without written consent of the Designer, be duplicated, used, or disclosed in whole or in part for design, fabrications, or construction of any building, structure, or improvement, or portion thereof, other than the specific project to which it pertains.

The De Anza
De Anza Properties
10931 N De Anza Blvd, Cupertino, CA

Garage Level 3 Plan

REVISIONS

No.	Date	Description

Date	11/13/18
Sheet Date	6/18/18
Scale	1/8" = 1'-0"
Drawn	Author
Job	17200
Sheet	A2.0-GL3

© Winkleman Designs 2018

C:\Users\Bill\Documents\CAH-CEN18_GPA_5 Story_v5_bill@winklemandesigns.com.rvt
11/12/2018 2:00:11 PM

Winkleman Designs
1795 Amaya Ridge Road
Soquel, CA 95073
Tel 408-353-6700
Fax 408-353-4729

bill@winklemandesigns.com

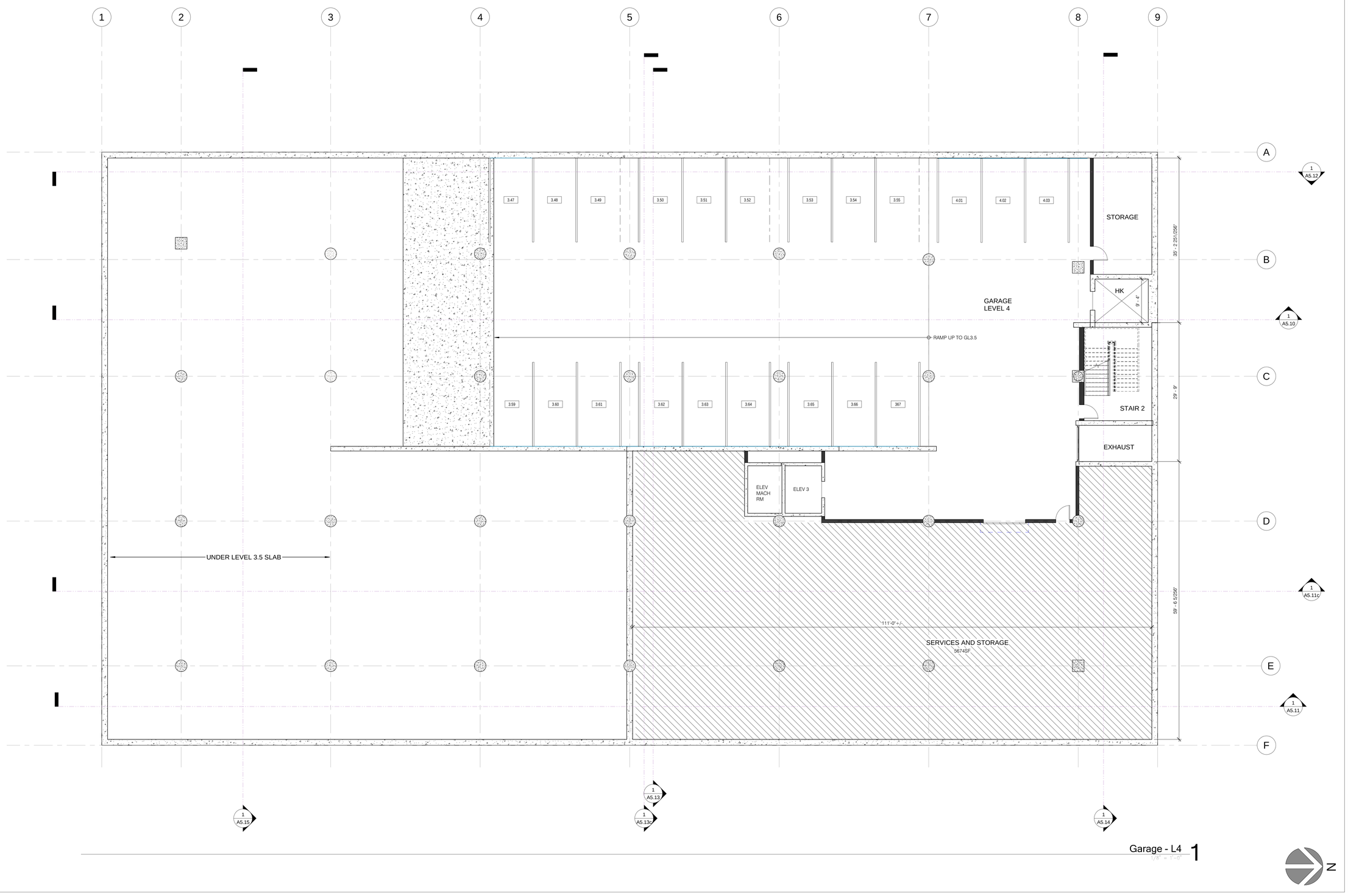

Garage - L4 1
1/8" = 1'-0"

All drawings and written materials appearing herein constitute original and unpublished work of the Designer and may not, without written consent of the Designer, be duplicated, used, or disclosed in whole or in part for design, fabrications, or construction of any building, structure, or improvement, or portion thereof, other than the specific project to which it pertains.

The De Anza
De Anza Properties
10931 N De Anza Blvd, Cupertino, CA

Garage Level 4 Plan

REVISIONS

No.	Date	Description

Date: 11/13/18
Sheet Date: 3/20/18
Scale: 1/8" = 1'-0"
Drawn: Author
Job: 17200
Sheet: A2.0-GL4

© Winkleman Designs 2018

C:\Users\Bill\Documents\DWG\17200_4 Story_v5_bill@winklemandesigns.com.rvt
11/12/2018 2:00:32 PM

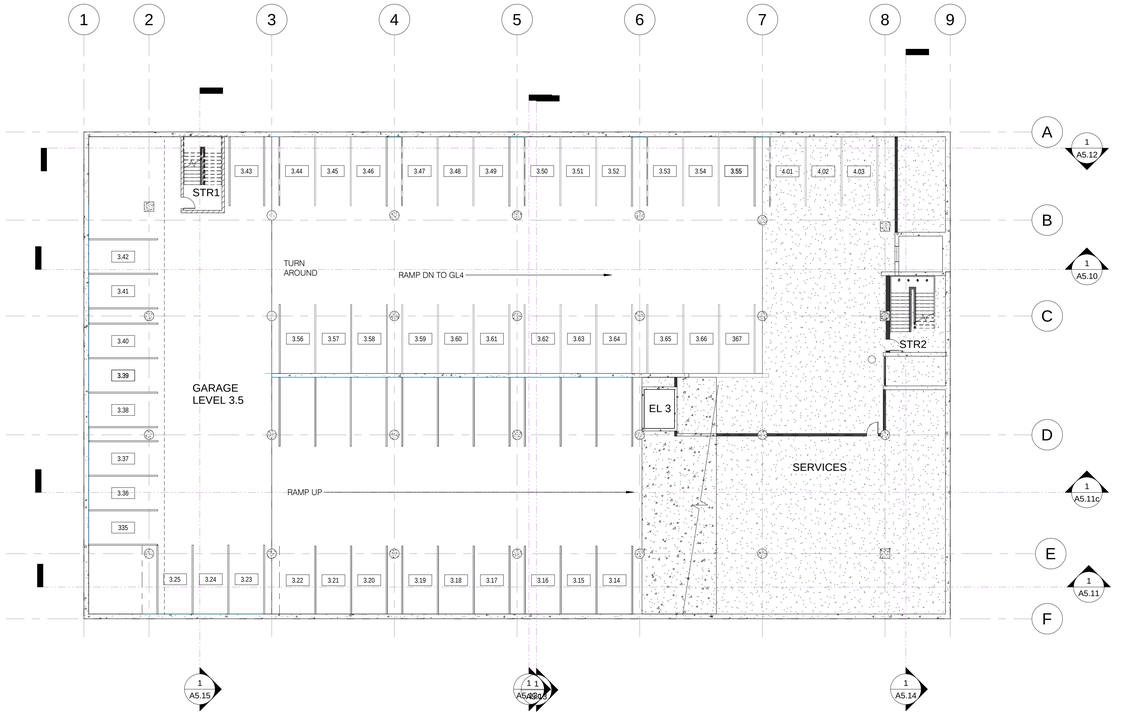

Garage - L3.5 3
1/16" = 1'-0"

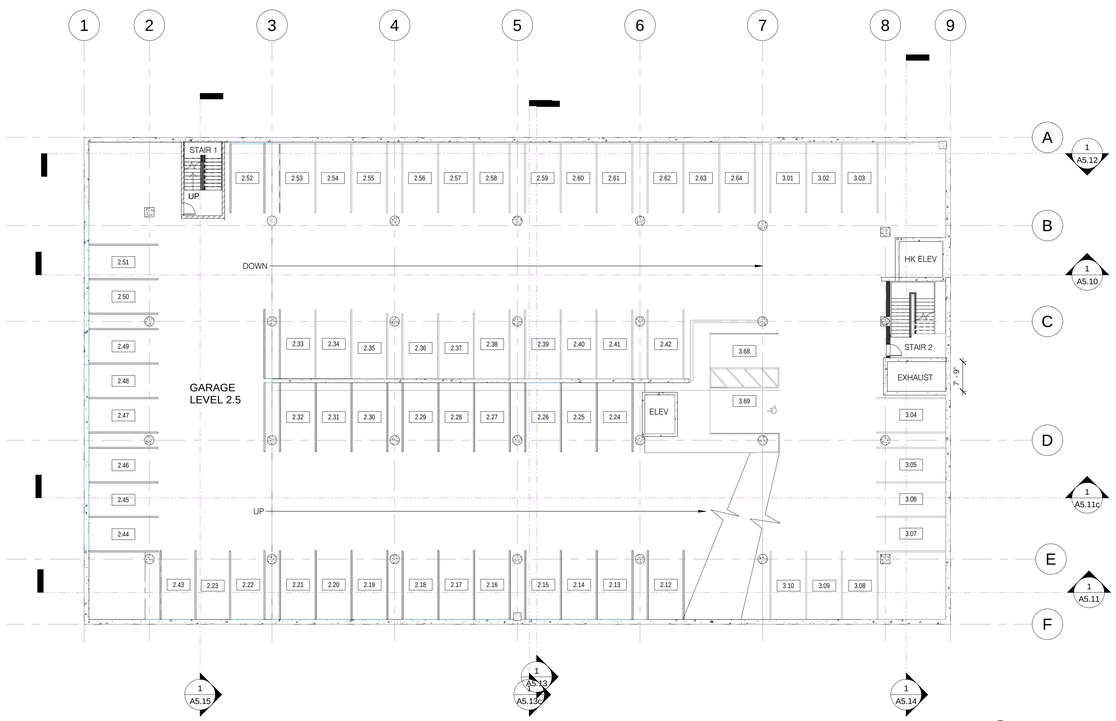

Garage - L2.5 2
1/16" = 1'-0"

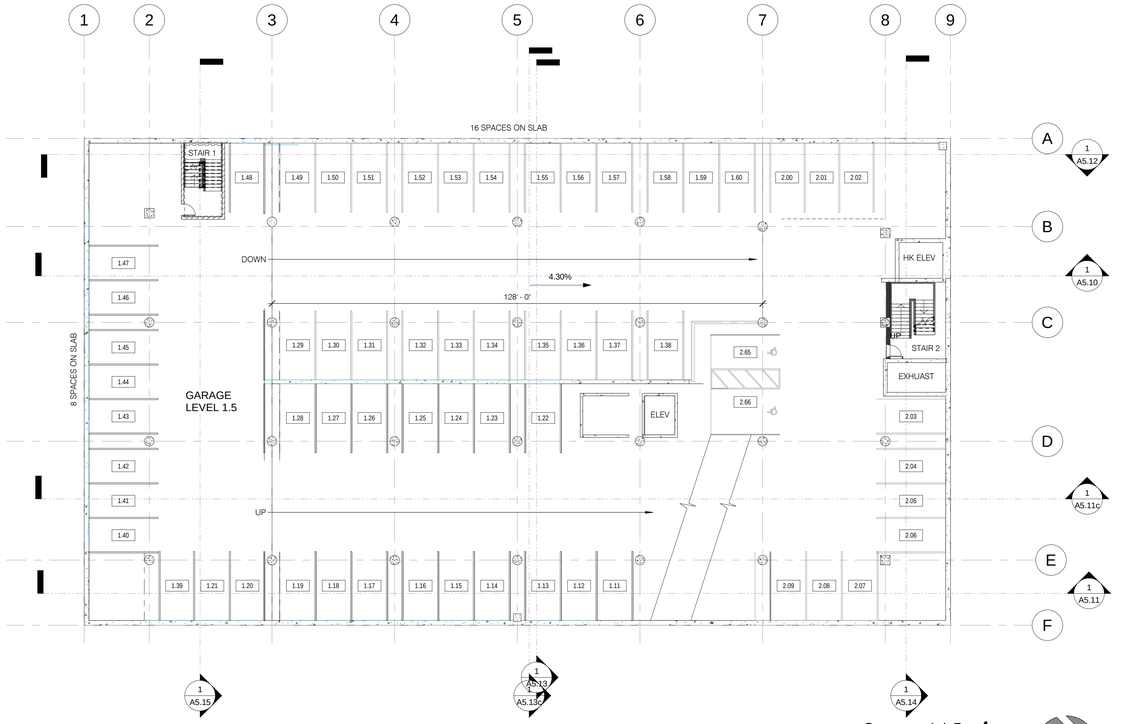

Garage - L1.5 1
1/16" = 1'-0"

Winkleman Designs
1795 Amaya Ridge Road
Soquel, CA 95073
Tel 408-353-6700
Fax 408-353-4729
bill@winklemandesigns.com

All drawings and written material appearing herein constitute original and unpublished work of the Designer and may not, without written consent of the Designer, be duplicated, used, or disclosed in whole or in part for design, fabrications, or construction of any building, structure, or improvement, or portion thereof, other than the specific project to which it pertains.

The De Anza
De Anza Properties
10931 N De Anza Blvd, Cupertino, CA

Garage Levels 1.5, 2.5, 3.5

REVISIONS

No.	Date	Description

Date	11/13/18
Sheet Date	6/18/18
Scale	1/16" = 1'-0"
Drawn	Author
Job	17200
Sheet	A2.0-Mids

© Winkleman Designs 2018

C:\Users\Bill\Documents\DAH-CEN18_GPA_5 Story_v5_bill@winklemandesigns.com.rvt
11/12/2018 2:00:50 PM

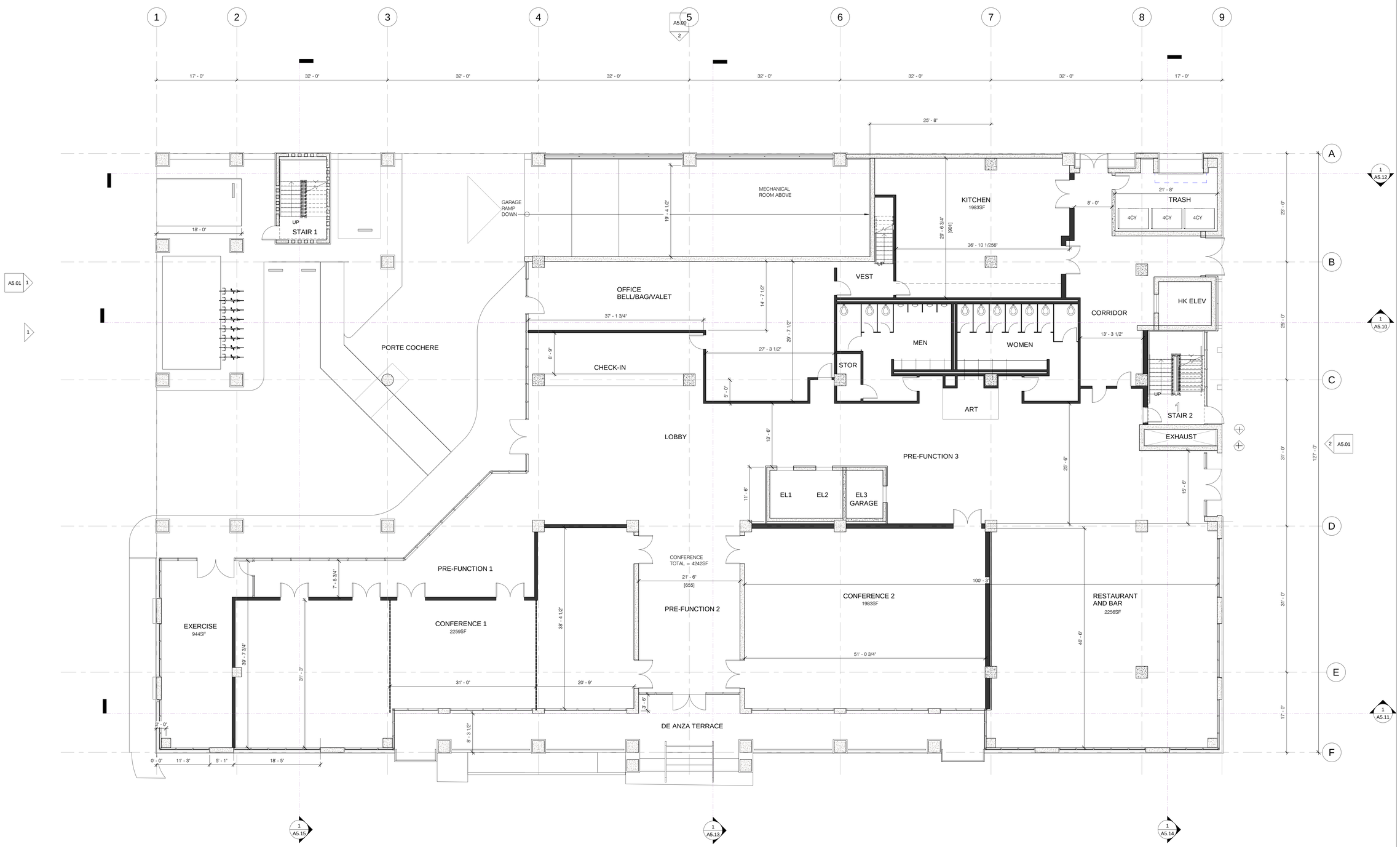

First Floor Plan 1

1/8" = 1'-0"

Winkleman Designs
1795 Amaya Ridge Road
Soquel, CA 95073
Tel 408-353-6700
Fax 408-353-4729

bill@winklemandesigns.com

All drawings and written materials appearing herein constitute original and unpublished work of the Designer and may not, without the written consent of the Designer, be duplicated, used, or disclosed in whole or in part for design, fabrications, or construction of any building, structure, or improvement, or portion thereof, other than the specific project to which it pertains.

The De Anza
De Anza Properties
10931 N De Anza Blvd, Cupertino, CA

First Floor Plan

REVISIONS

No.	Date	Description

Date: 11/13/18
Sheet Date: 6/18/18
Scale: 1/8" = 1'-0"
Drawn: W
Job: 17200
Sheet: A2.01

© Winkleman Designs 2018

C:\Users\Bill\Documents\DWG\A2.01_GPA_6 Story_v5_bill@winklemandesigns.com.rvt
11/12/2018 2:01:13 PM

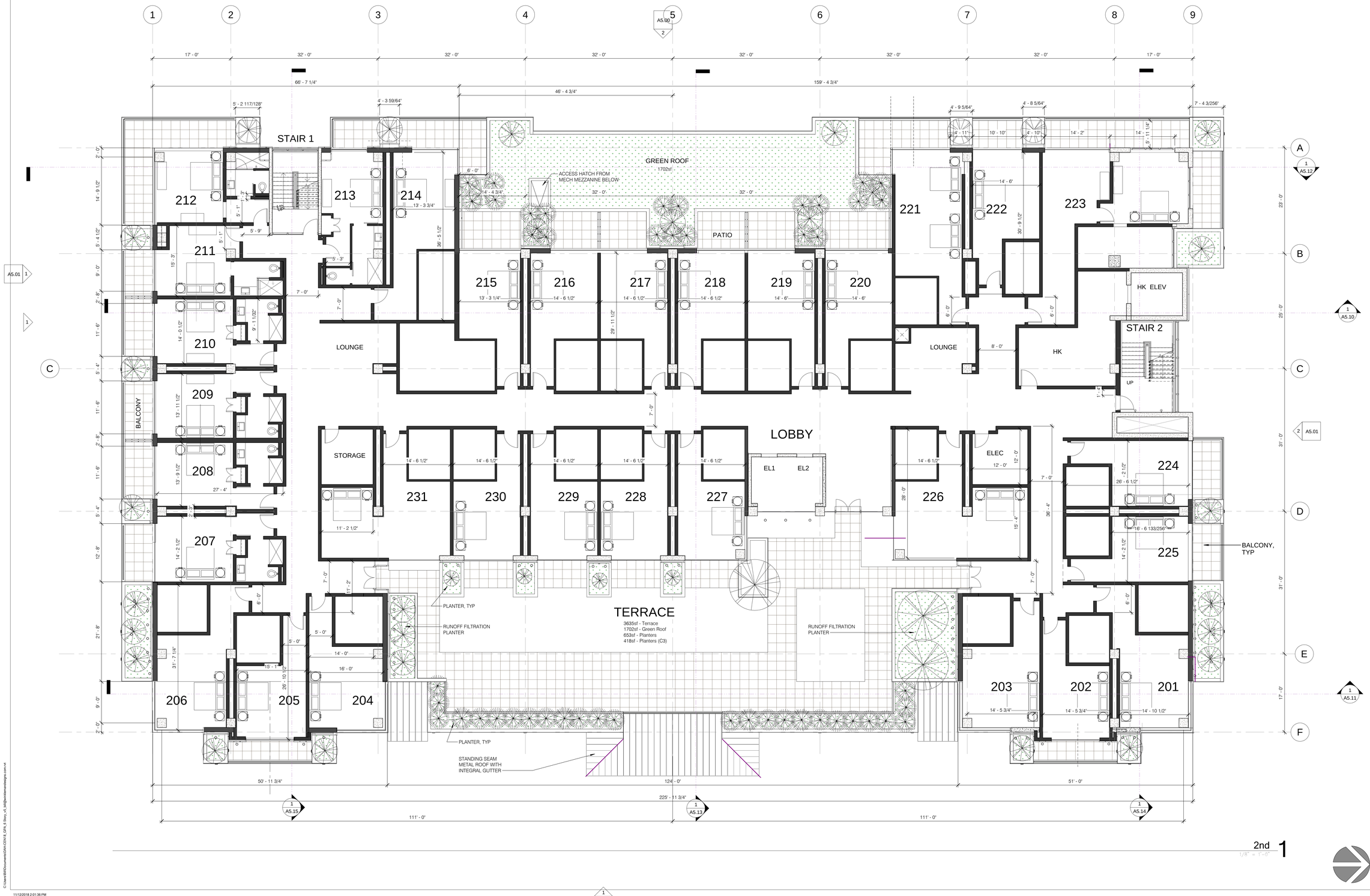

Winkleman Designs
1795 Amaya Ridge Road
Soquel, CA 95073
Tel 408-353-6700
Fax 408-353-4729
bill@winklemandesigns.com

All drawings and written material appearing herein constitute original and unpublished work of the Designer and may not, without written consent of the Designer, be duplicated, used, or disclosed in whole or in part for design, fabrications, or construction of any building, structure, or improvement, or portion thereof, other than the specific project to which it pertains.

The De Anza
De Anza Properties
10931 N De Anza Blvd, Cupertino, CA

Second Floor Plan

REVISIONS

No.	Date	Description

Date	11/13/18
Sheet Date	6/18/18
Scale	1/8" = 1'-0"
Drawn	W
Job	17200
Sheet	A2.02

c: Winkleman Designs 2018

C:\Users\Bill\Documents\CAH-CEN18_GPA_5 Story_v5_bill@winklemandesigns.com.rvt
11/12/2018 2:01:36 PM

3rd 1

1/8" = 1'-0"

4th, 5th and 6th FLOORS SIMILAR

N

Winkleman Designs
1795 Amaya Ridge Road
Soquel, CA 95073
Tel 408-353-6700
Fax 408-353-4729
bill@winklemandesigns.com

All drawings and written material appearing herein constitute original and unpublished work of the Designer and may not, without written consent of the Designer, be duplicated, used, or disclosed in whole or in part for design, fabrications, or construction of any building, structure, or improvement, or portion thereof, other than the specific project to which it pertains.

The De Anza

De Anza Properties

10931 N De Anza Blvd, Cupertino, CA

Third Floor Plan

REVISIONS

No.	Date	Description

Date: 11/13/18

Sheet Date: 03/20/18

Scale: 1/8" = 1'-0"

Drawn: W

Job: 17200

Sheet: A2.03

© Winkleman Designs 2018

C:\Users\Bill\Documents\DAH-CEN18_OPA_5 Story_v5_bill@winklemandesigns.com.rvt

11/12/2018 2:01:54 PM

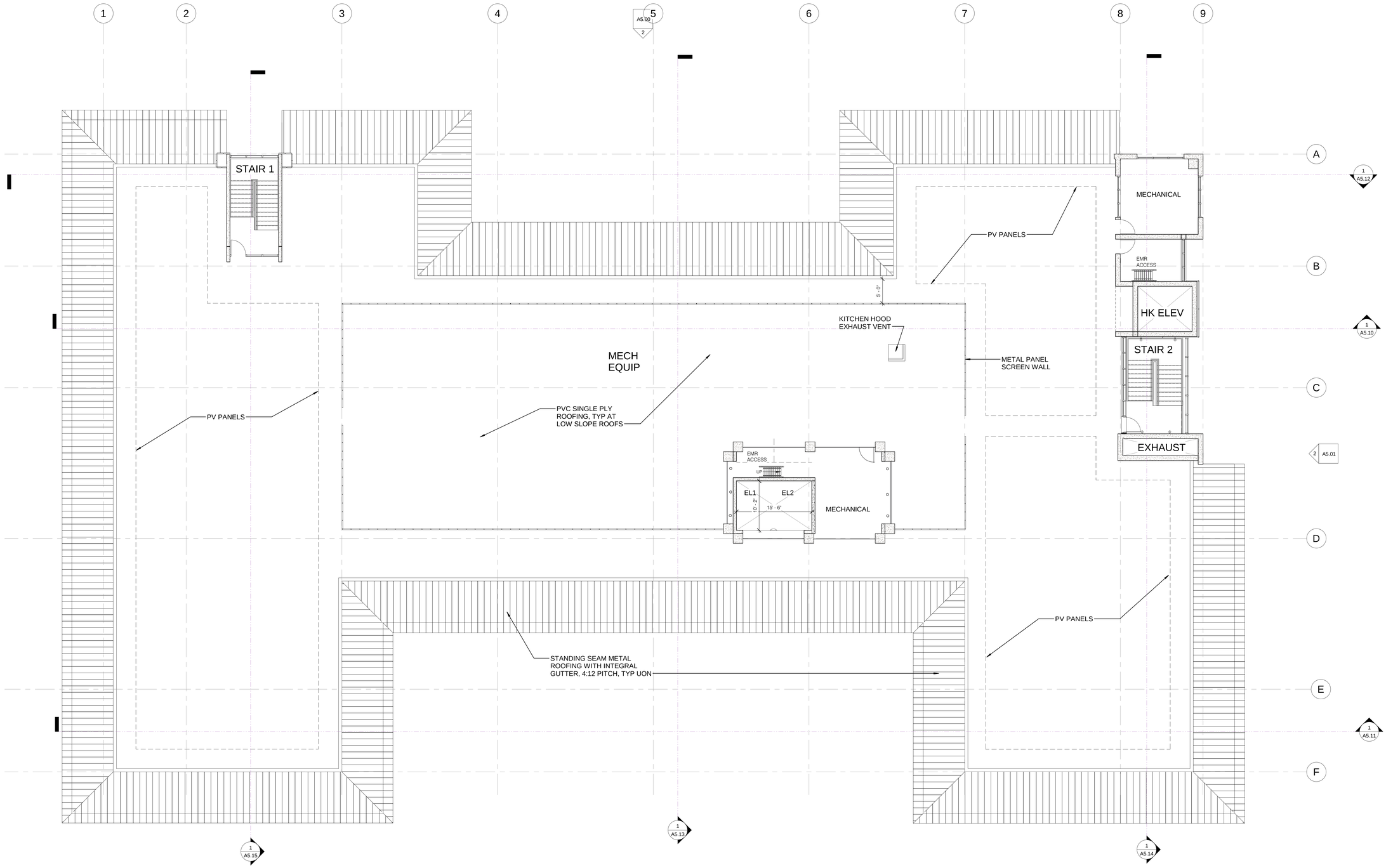

Roof 1

1/8" = 1'-0"

N

Winkleman Designs
1795 Amaya Ridge Road
Soquel, CA 95073
Tel 408-353-6700
Fax 408-353-4729
bill@winklemandesigns.com

All drawings and written material appearing herein constitute original and unpublished work of the Designer and may not, without written consent of the Designer, be duplicated, used, or disclosed in whole or in part for design, fabrications, or construction of any building, structure, or improvement, or portion thereof, other than the specific project to which it pertains.

The De Anza
De Anza Properties
10931 N De Anza Blvd, Cupertino, CA

Roof Plan

REVISIONS

No.	Date	Description

Date	11/13/18
Sheet Date	10/15/18
Scale	1/8" = 1'-0"
Drawn	Author
Job	17200
Sheet	A2.04

© Winkleman Designs 2018

C:\Users\Bill\Documents\DAH-CEN18_GPA_5 Story_v5_bill@winklemandesigns.com.rvt

11/12/2018 2:02:17 PM

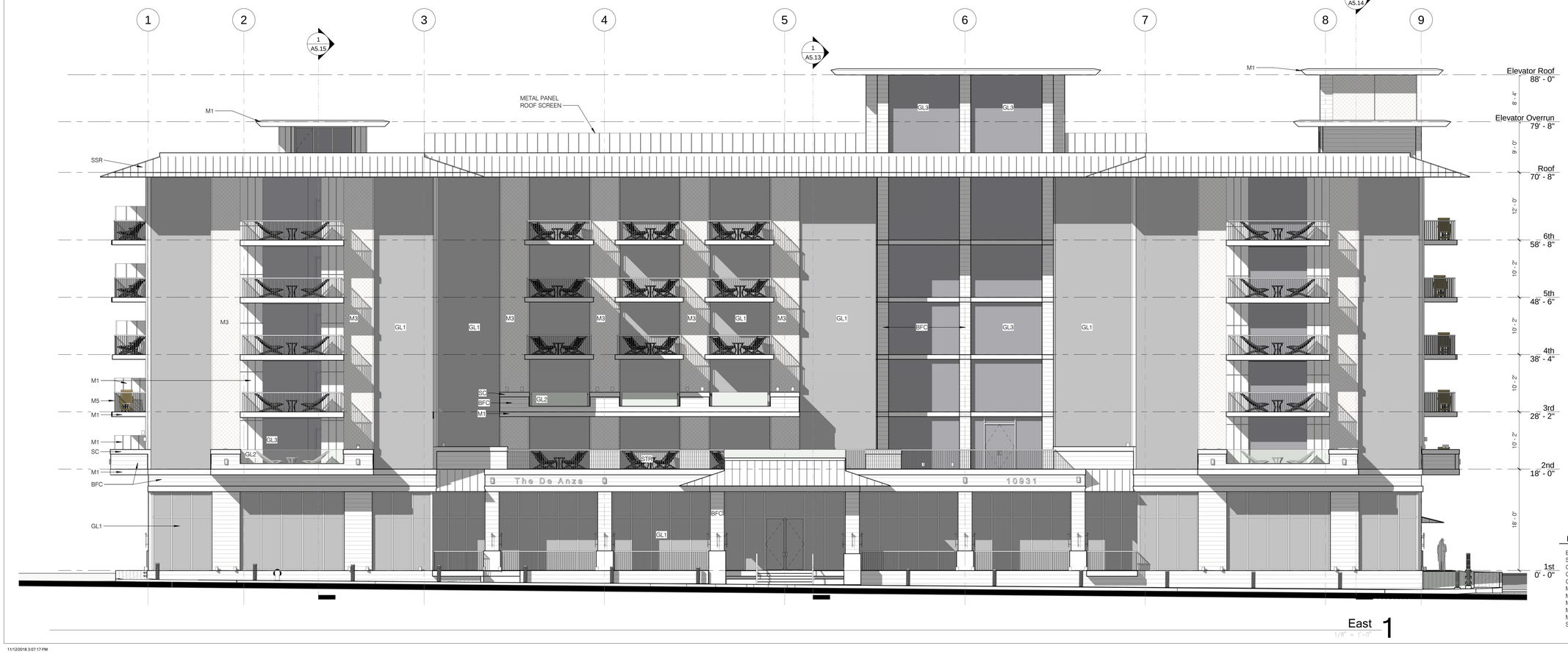

EXTERIOR MATERIALS

BFC	BOARD FORMED CONCRETE
SC	SMOOTH FORMED CONCRETE
GL1	GLAZING SYSTEM 1 (LIGHT GRAY)
GL2	GLASS RAILINGS (CLEAR)
GL3	GLAZING SYSTEM 2 (DARK GRAY)
M1	METAL 1
M2	METAL 2
M3	METAL 3 (GREEN SCREEN)
M4	METAL 4 (EXPANDED METAL)
M5	PAINTED METAL
SSR	STANDING SEAM ROOFING

Winkleman Designs
1795 Amaya Ridge Road
Soquel, CA 95073
Tel 408-353-6700
Fax 408-353-4729
bill@winklemandesigns.com

All drawings and written material appearing herein constitute original and unpublished work of the Designer and may not, without written consent of the Designer, be duplicated, used, or disclosed in whole or in part for design, fabrications, or construction of any building, structure, or improvement, or portion thereof, other than the specific project to which it pertains.

The De Anza
De Anza Properties
10931 N De Anza Blvd, Cupertino, CA

Exterior Elevations

REVISIONS

No.	Date	Description

Date: 11/13/18
Sheet Date: 6/18/18
Scale: As indicated
Drawn: W
Job: 17200
Sheet: A5.00

© Winkleman Designs 2018

C:\Users\Bill\Documents\DANA\DANA_CDN1A_5 Story_v5_bill@winklemandesigns.com.rvt
11/12/2018 3:07:17 PM

North 2

1/8" = 1'-0"

South 1

1/8" = 1'-0"

EXTERIOR MATERIALS

BFC	BOARD FORMED CONCRETE
SC	SMOOTH FORMED CONCRETE
GL1	GLAZING SYSTEM 1 (LIGHT GRAY)
GL2	GLASS RAILINGS (CLEAR)
GL3	GLAZING SYSTEM 2 (DARK GRAY)
M1	METAL 1
M2	METAL 2
M3	METAL 3 (GREEN SCREEN)
M4	METAL 4 (EXPANDED METAL)
M5	PAINTED METAL
SSR	STANDING SEAM ROOFING

Winkleman Designs
1795 Amaya Ridge Road
Soquel, CA 95073
Tel 408-353-6700
Fax 408-353-4729
bill@winklemandesigns.com

All drawings and written material appearing herein constitute original and unpublished work of the Designer and may not, without written consent of the Designer, be duplicated, used, or disclosed in whole or in part for design, fabrications, or construction of any building, structure, or improvement, or portion thereof, other than the specific project for which it pertains.

The De Anza
De Anza Properties
10931 N De Anza Blvd, Cupertino, CA

Exterior Elevations

REVISIONS

No.	Date	Description

Date: 11/13/18
Sheet Date: 6/18/18
Scale: As indicated
Sheet: W
Job: 17200
Sheet: A5.01

© Winkleman Designs 2018

C:\Users\Bill\Documents\Work\Archi\18_Cert_A Story_v5_bill@winklemandesigns.com.rvt
11/12/2018 2:14:07 PM

Longitudinal - Parking at West Wall 1

1/8" = 1'-0"

Winkleman Designs
1795 Anaya Ridge Road
Soquel, CA 95073
Tel 408-353-6700
Fax 408-353-4729

bill@winkelmandesigns.com

All drawings and written material appearing herein constitute original and unpublished work of the Designer and may not, without written consent of the Designer, be duplicated, used, or disclosed in whole or in part for design, fabrications, or construction of any building, structure, or improvement, or portion thereof, other than the specific project for which it pertains.

The De Anza
De Anza Properties
10931 N De Anza Blvd, Cupertino, CA

Building Sections

REVISIONS

No.	Date	Description

Date: 11/13/18
Sheet Date: 6/18/18
Scale: 1/8" = 1'-0"
Sheet: W
Job: 17200
Sheet: A5.10

© Winkleman Designs 2018

C:\Users\Bill\Documents\DeAnza\17200_DRN_A Story_v3_bill@winkelmandesigns.com.rvt

11/12/2018 2:16:38 PM

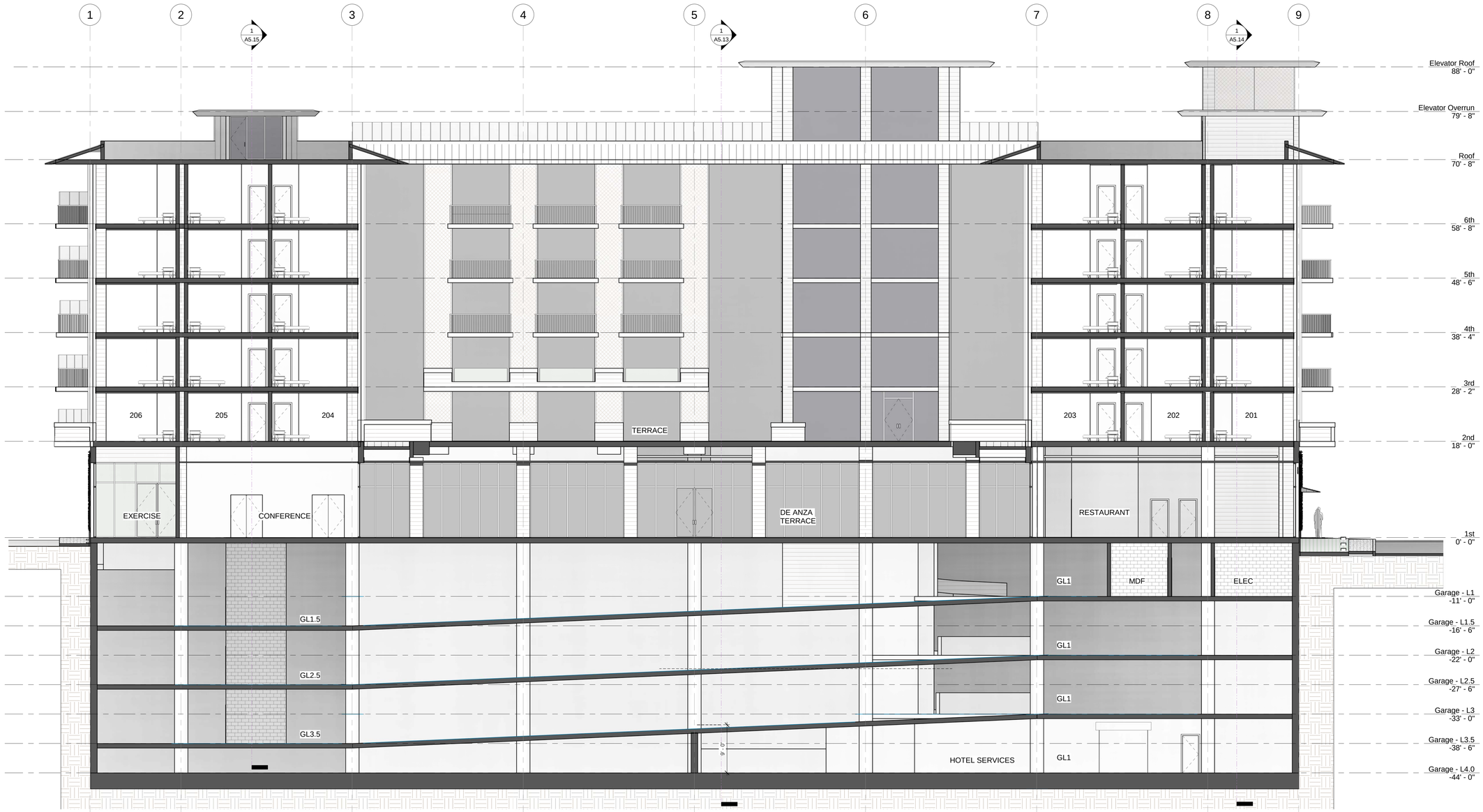

Longitudinal - through Terrace 1

1/8" = 1'-0"

Winkleman Designs
1795 Amaya Ridge Road
Soquel, CA 95073
Tel 408-353-6700
Fax 408-353-4729
bill@winklemandesigns.com

All drawings and written material appearing herein constitute original and unpublished work of the Designer and may not, without written consent of the Designer, be duplicated, used, or disclosed in whole or in part for design, fabrications, or construction of any building, structure, or improvement, or portion thereof, other than the specific project to which it pertains.

The De Anza

De Anza Properties

10931 N De Anza Blvd, Cupertino, CA

Bulding Sections

REVISIONS

No.	Date	Description

Date	11/13/18
Sheet Date	6/18/18
Scale	1/8" = 1'-0"
Drawn	Author
Job	17200
Sheet	A5.11

© Winkleman Designs 2018

C:\Users\Bill\Documents\DAH-CEN18_GPA_5 Story_v5_bill@winklemandesigns.com.rvt

11/12/2018 2:21:00 PM

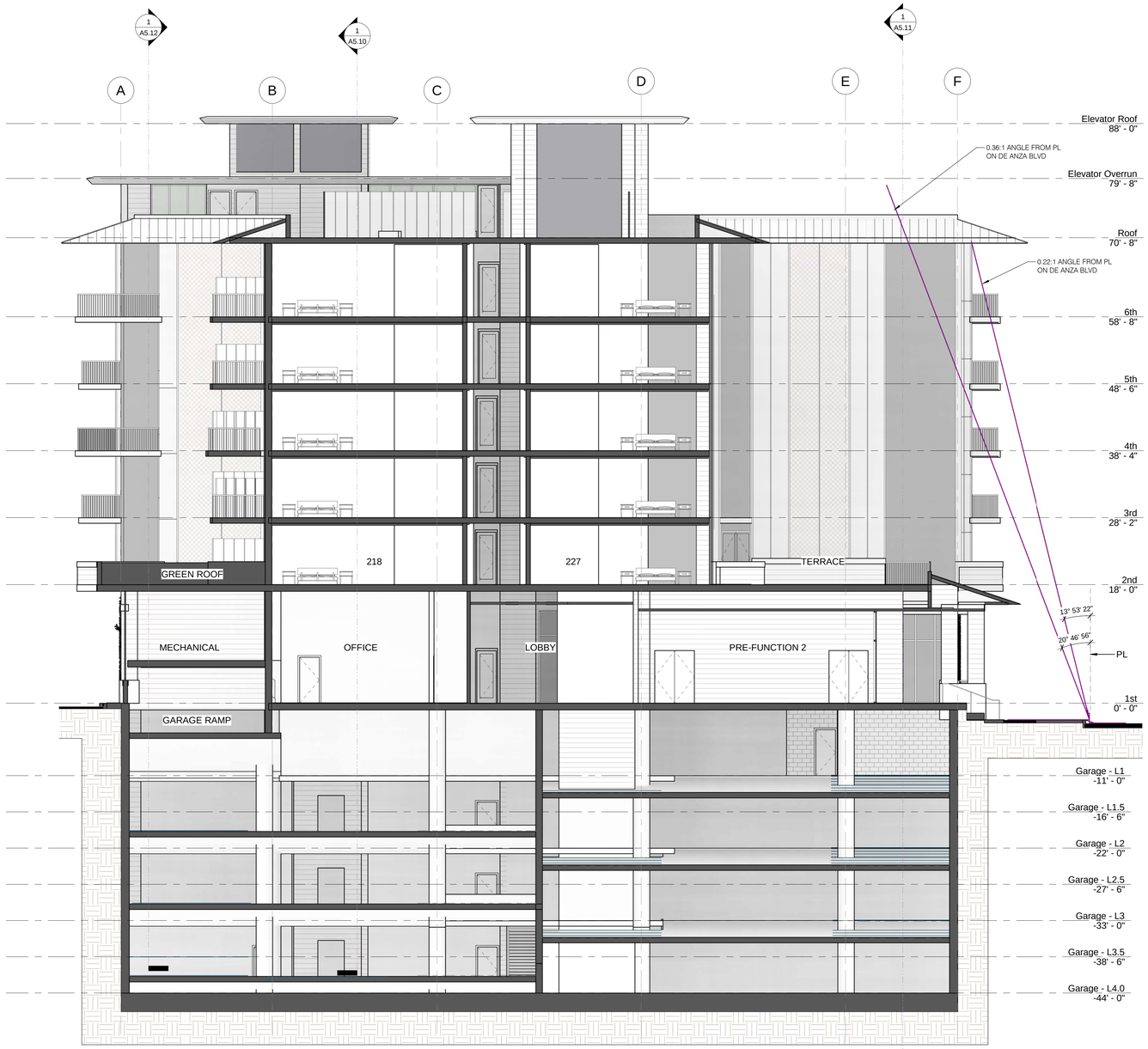

Lateral - through Terrace Looking North 1

1/8" = 1'-0"

Winkleman Designs
1795 Amaya Ridge Road
Soquel, CA 95073
Tel 408-353-6700
Fax 408-353-4729
bill@winklemandesigns.com

All drawings and written material appearing herein constitute original and unpublished work of the Designer and may not, without written consent of the Designer, be duplicated, used, or disclosed in whole or in part for design, fabrications, or construction of any building, structure, or improvement, or portion thereof, other than the specific project to which it pertains.

The De Anza
De Anza Properties
10931 N De Anza Blvd, Cupertino, CA

Building Section

REVISIONS

No.	Date	Description

Date: 11/13/18
Sheet Date: 6/18/18
Scale: 1/8" = 1'-0"
Drawn: Author
Job: 17200
Sheet: A5.13

© Winkleman Designs 2018

C:\Users\Bill\Documents\DAH-CEN18_GPA_5 Story_v5_bill@winklemandesigns.com.rvt

11/12/2018 2:27:48 PM

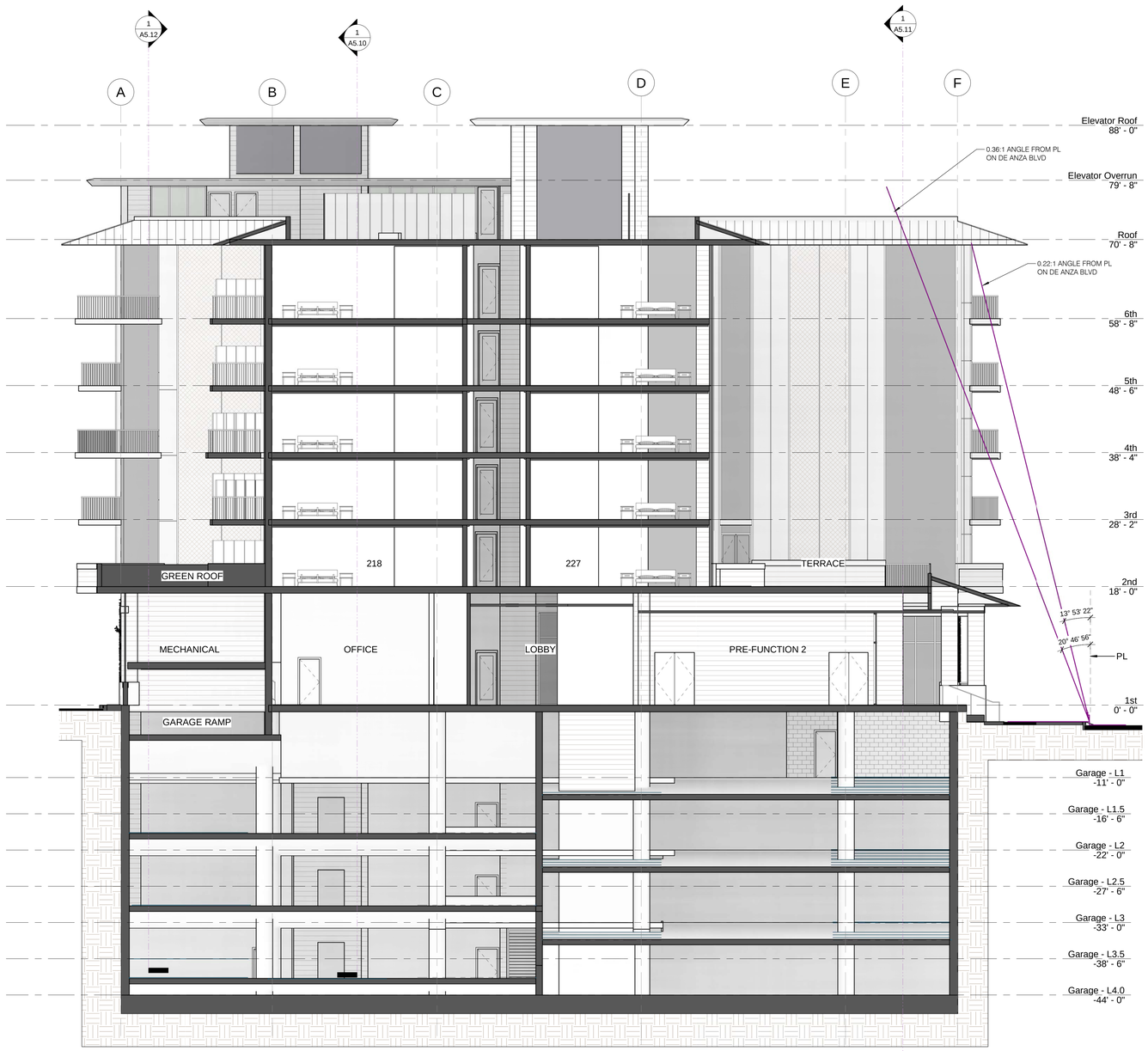

Lateral - through Terrace Looking North 1

1/8" = 1'-0"

Winkleman Designs
1795 Amaya Ridge Road
Soquel, CA 95073
Tel 408-353-6700
Fax 408-353-4729
bill@winklemandesigns.com

All drawings and written material appearing herein constitute original and unpublished work of the Designer and may not, without written consent of the Designer, be duplicated, used, or disclosed in whole or in part for design, fabrications, or construction of any building, structure, or improvement, or portion thereof, other than the specific project to which it pertains.

The De Anza
De Anza Properties
10931 N De Anza Blvd, Cupertino, CA

Building Section

REVISIONS

No.	Date	Description

Date: 11/13/18
Sheet Date: 6/18/18
Scale: 1/8" = 1'-0"
Drawn: Author
Job: 17200
Sheet: A5.13

© Winkleman Designs 2018

C:\Users\Bill\Documents\DAH-CEN18_GPA_5 Story_v5_bill@winklemandesigns.com.rvt

11/12/2018 2:30:12 PM

Lateral - through Stair 2 1

1/8" = 1'-0"

Winkleman Designs
1795 Amaya Ridge Road
Soquel, CA 95073
Tel 408-353-6700
Fax 408-353-4729
bill@winklemandesigns.com

All drawings and written material appearing herein constitute original and unpublished work of the Designer and may not, without written consent of the Designer, be duplicated, used, or disclosed in whole or in part for design, fabrications, or construction of any building, structure, or improvement, or portion thereof, other than the specific project to which it pertains.

The De Anza
De Anza Properties
10931 N De Anza Blvd, Cupertino, CA

Building Section

REVISIONS

No.	Date	Description

Date	11/13/18
Sheet Date	6/18/18
Scale	1/8" = 1'-0"
Drawn	Author
Job	17200
Sheet	A5.14

© Winkleman Designs 2018

C:\Users\Bill\Documents\DAH-CEN18_GPA_5 Story_v5_bill@winklemandesigns.com.rvt

11/12/2018 2:32:01 PM

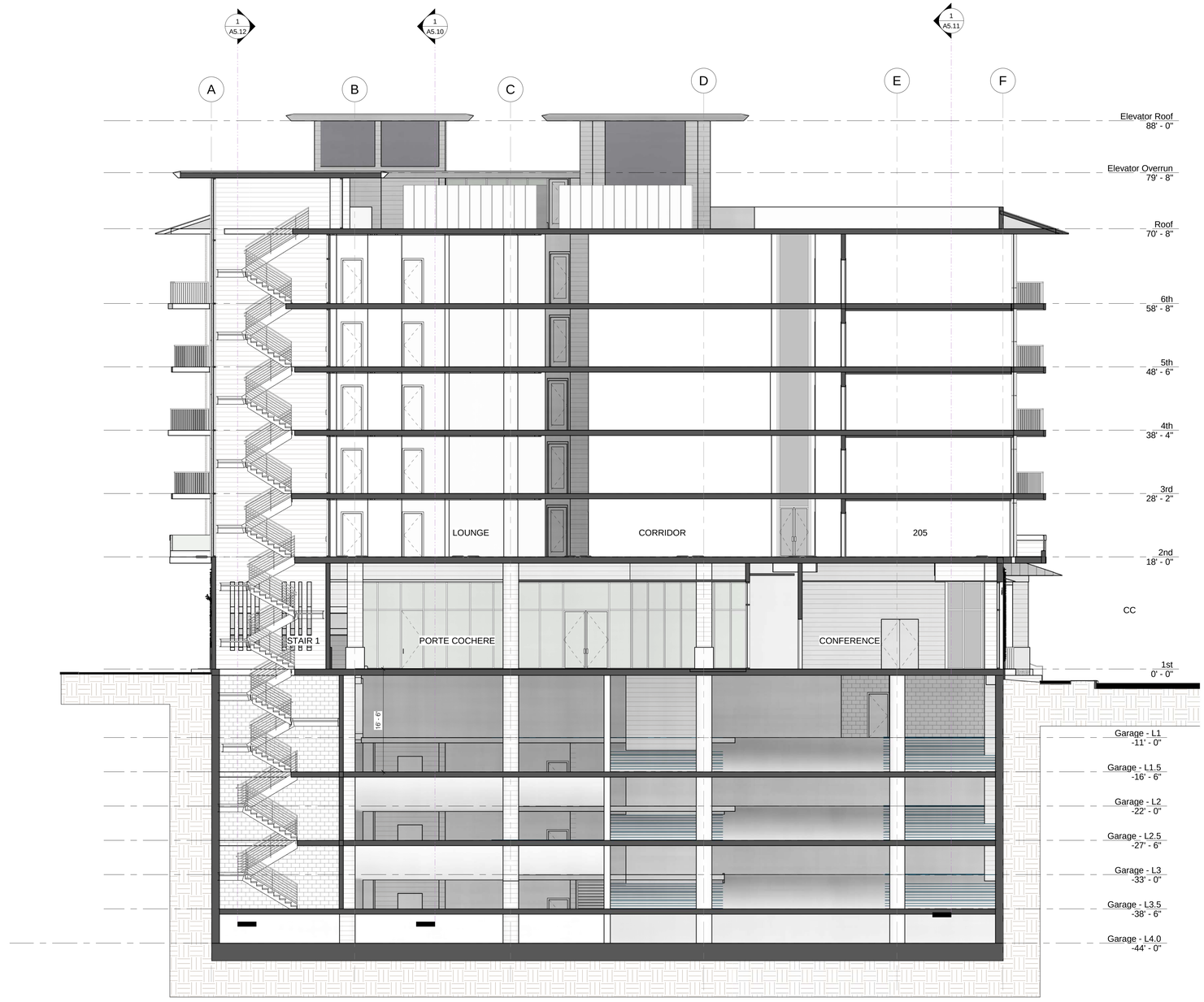

Lateral - through Stair 1 1

1/8" = 1'-0"

Winkleman Designs
1795 Amaya Ridge Road
Soquel, CA 95073
Tel 408-353-6700
Fax 408-353-4729
bill@winklemandesigns.com

All drawings and written material appearing herein constitute original and unpublished work of the Designer and may not, without written consent of the Designer, be duplicated, used, or disclosed in whole or in part for design, fabrications, or construction of any building, structure, or improvement, or portion thereof, other than the specific project to which it pertains.

The De Anza
De Anza Properties
10931 N De Anza Blvd, Cupertino, CA

Building Section

REVISIONS

No.	Date	Description

Date	11/13/18
Sheet Date	6/18/18
Scale	1/8" = 1'-0"
Drawn	Author
Job	17200
Sheet	A5.15

© Winkleman Designs 2018

C:\Users\Bill\Documents\DAH-CEN18_GPA_5 Story_v5_bill@winklemandesigns.com.rvt

11/12/2018 2:35:19 PM

11/12/2018 3:34:55 PM

C:\Users\Bill\Documents\DAH-CEN18_GPA_6 Story_v5_bill@winklemandesigns.com.rvt

Winkleman Designs
1795 Amaya Ridge Road Soquel, CA 95073
408.353.6700 bill@winklemandesigns.com

The De Anza
De Anza Properties
10931 N De Anza Blvd, Cupertino, CA

East View

A11.00

Drawn W
Scale
Date 11/13/18

11/12/2018 3:35:13 PM

C:\Users\Bill\Documents\DAH-CEN18_GPA_6 Story_v5_bill@winklemandesigns.com.rvt

Winkleman Designs
1795 Amaya Ridge Road Soquel, CA 95073
408.353.6700 bill@winklemandesigns.com

The De Anza

De Anza Properties

10931 N De Anza Blvd, Cupertino, CA

East View - Evening

A11.00n

Drawn Author
Scale
Date 11/13/18

11/12/2018 3:35:41 PM

C:\Users\Bill\Documents\DAH-CEN18_GPA_6 Story_v5_bill@winklemandesigns.com.rvt

Winkleman Designs
1795 Amaya Ridge Road Soquel, CA 95073
408.353.6700 bill@winklemandesigns.com

The De Anza
De Anza Properties
10931 N De Anza Blvd, Cupertino, CA

SE View

A11.01
Drawn Author
Scale
Date 11/13/18

11/12/2018 3:35:13 PM

C:\Users\Bill\Documents\DAH-CEN18_GPA_6 Story_v5_bill@winklemandesigns.com.rvt

Winkleman Designs
1795 Amaya Ridge Road Soquel, CA 95073
408.353.6700 bill@winklemandesigns.com

The De Anza

De Anza Properties

10931 N De Anza Blvd, Cupertino, CA

East View - Evening

A11.00n

Drawn Author
Scale
Date 11/13/18

11/12/2018 3:35:41 PM

C:\Users\Bill\Documents\DAH-CEN18_GPA_6 Story_v5_bill@winklemandesigns.com.rvt

Winkleman Designs
1795 Amaya Ridge Road Soquel, CA 95073
408.353.6700 bill@winklemandesigns.com

The De Anza
De Anza Properties
10931 N De Anza Blvd, Cupertino, CA

SE View

A11.01
Drawn Author
Scale
Date 11/13/18

11/12/2018 3:35:53 PM

C:\Users\Bill\Documents\DAH-CEN18_GPA_6 Story_v5_bill@winklemandesigns.com.rvt

Winkleman Designs
1795 Amaya Ridge Road Soquel, CA 95073
408.353.6700 bill@winklemandesigns.com

The De Anza
De Anza Properties
10931 N De Anza Blvd, Cupertino, CA

SE View - Evening

A11.01n
Drawn Author
Scale
Date 11/13/18

11/12/2018 3:36:09 PM

C:\Users\Bill\Documents\DAH-CEN18_GPA_6 Story_v5_bill@winklemandesigns.com.rvt

Winkleman Designs
1795 Amaya Ridge Road Soquel, CA 95073
408.353.6700 bill@winklemandesigns.com

The De Anza
De Anza Properties
10931 N De Anza Blvd, Cupertino, CA

South View

A11.02
Drawn W
Scale
Date 11/13/18

11/12/2018 3:42:30 PM

C:\Users\Bill\Documents\DAH-CEN18_GPA_6 Story_v5_bill@winklemandesigns.com.rvt

Winkleman Designs
1795 Amaya Ridge Road Soquel, CA 95073
408.353.6700 bill@winklemandesigns.com

The De Anza
De Anza Properties
10931 N De Anza Blvd, Cupertino, CA

West View

A11.03

Drawn W
Scale
Date 11/13/18

11/12/2018 3:42:51 PM

C:\Users\Bill\Documents\DAH-CEN18_GPA_6 Story_v5_bill@winklemandesigns.com.rvt

Winkleman Designs
1795 Amaya Ridge Road Soquel, CA 95073
408.353.6700 bill@winklemandesigns.com

The De Anza
De Anza Properties
10931 N De Anza Blvd, Cupertino, CA

NW View

A11.04
Drawn Author
Scale
Date 11/13/18

11/12/2018 3:43:16 PM

C:\Users\Bill\Documents\DAH-CEN18_GPA_6 Story_v5_bill@winklemandesigns.com.rvt

Winkleman Designs
1795 Amaya Ridge Road Soquel, CA 95073
408.353.6700 bill@winklemandesigns.com

The De Anza

De Anza Properties

10931 N De Anza Blvd, Cupertino, CA

North View

A11.05

Drawn W
Scale
Date 11/13/18

11/12/2018 3:37:13 PM

C:\Users\Bill\Documents\DAH-CEN18_GPA_6 Story_v5_bill@winklemandesigns.com.rvt

Winkleman Designs
1795 Amaya Ridge Road Soquel, CA 95073
408.353.6700 bill@winklemandesigns.com

The De Anza
De Anza Properties
10931 N De Anza Blvd, Cupertino, CA

North View Evening

A11.05n

Drawn Author
Scale
Date 11/13/18

11/12/2018 3:43:35 PM

C:\Users\Bill\Documents\DAH-CEN18_GPA_6 Story_v5_bill@winklemandesigns.com.rvt

Winkleman Designs
1795 Amaya Ridge Road Soquel, CA 95073
408.353.6700 bill@winklemandesigns.com

The De Anza
De Anza Properties
10931 N De Anza Blvd, Cupertino, CA

NE View

A11.06

Drawn Author
Scale
Date 11/13/18

11/12/2018 3:44:19 PM

DARK GREY GLAZING

GLAZING 3
(GL3)

CLEAR GLAZING

GLAZING 2
(GL2)

LIGHT GREY GLAZING

GLAZING 1
(GL1)

GREEN SCREEN CORTEN

METAL 3
(M3)

ZINC

METAL 1
(M1)

CONCRETE, SMOOTH FINISH

SMOOTH
CONCRETE (SC)

CONCRETE, BOARD-FORM FINISH

BOARD FORMED
CONCRETE (BFC)

CORTEN

METAL 2
(M2)

Winkleman Designs
1795 Amaya Ridge Road Soquel, CA 95073
408.353.6700 bill@winklemandesigns.com

The De Anza
De Anza Properties
10931 N De Anza Blvd, Cupertino, CA

Materials Board

A11.07
Drawn Author
Scale
Date 11/13/18

C:\Users\Bill\Documents\DAH-CEN18_GPA_6 Story_v5_bill@winklemandesigns.com.rvt

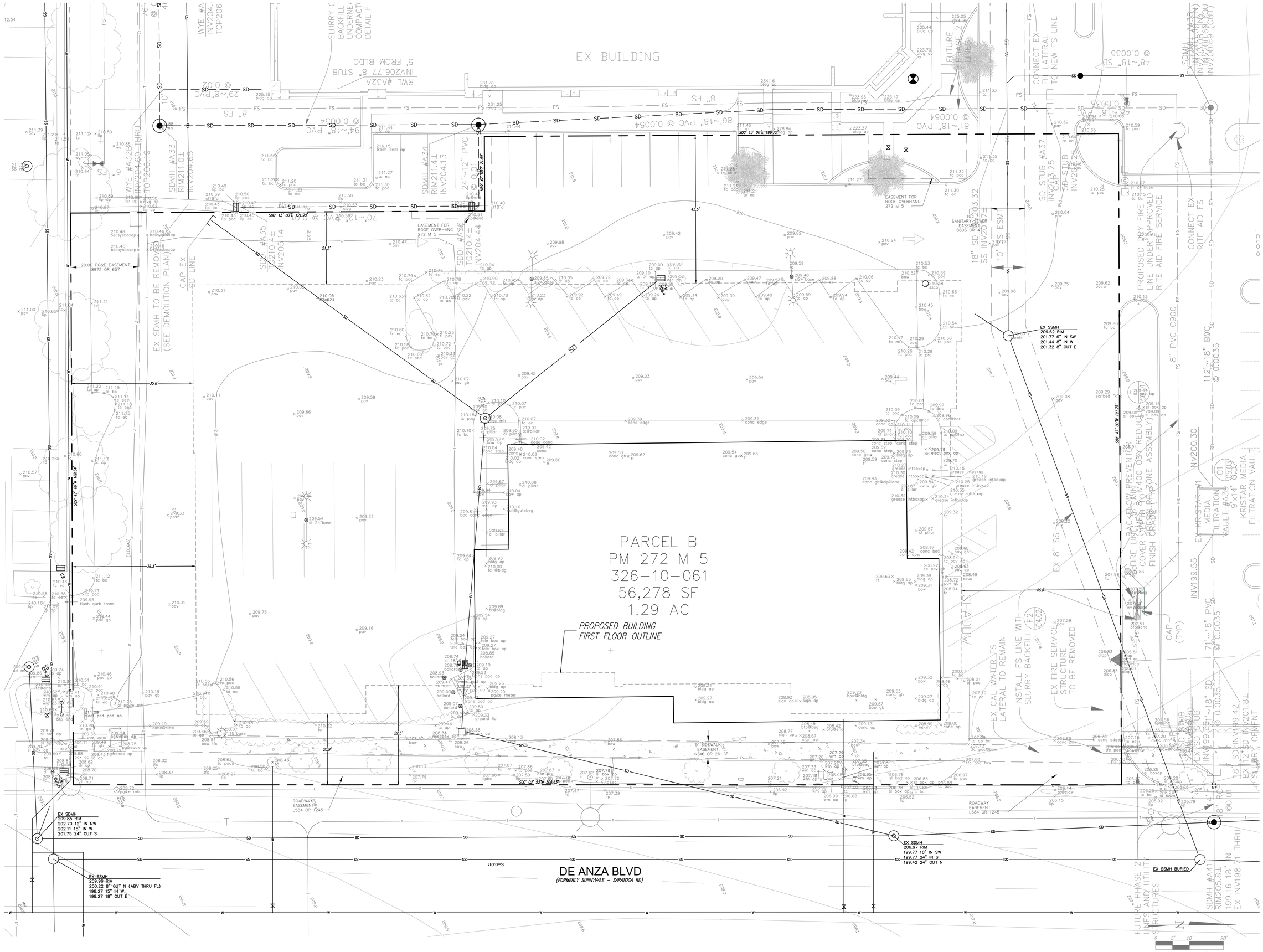

Winkleman Designs
1795 Amaya Ridge Road
Soquel, CA 95073
Tel 408-353-6700
Fax 408-353-4729
bill@winklemandesigns.com

JMH WEISS, INC.
Civil Engineering – Surveying – Land Planning
1731 Technology Drive, Suite 880
San Jose, CA 95110
(408) 286-4555

All drawings and written material appearing herein constitute original and unpublished work of the Designer and may not, without written consent of the Designer, be duplicated, used, or disclosed in whole or in part for design, fabrication, or construction of any building, structure, or improvement, or portion thereof, other than the specific project to which it pertains.

THE DE ANZA

De Anza Properties
10931 N De Anza Blvd, Cupertino, CA

EXISTING CONDITIONS

REVISIONS

No.	Date	Description

Date	11/12/18
Sheet Date	11/12/18
Scale	AS-SHOWN
Drawn	OG
Job	5132
Sheet	C1.0

© Winkleman Designs 2018

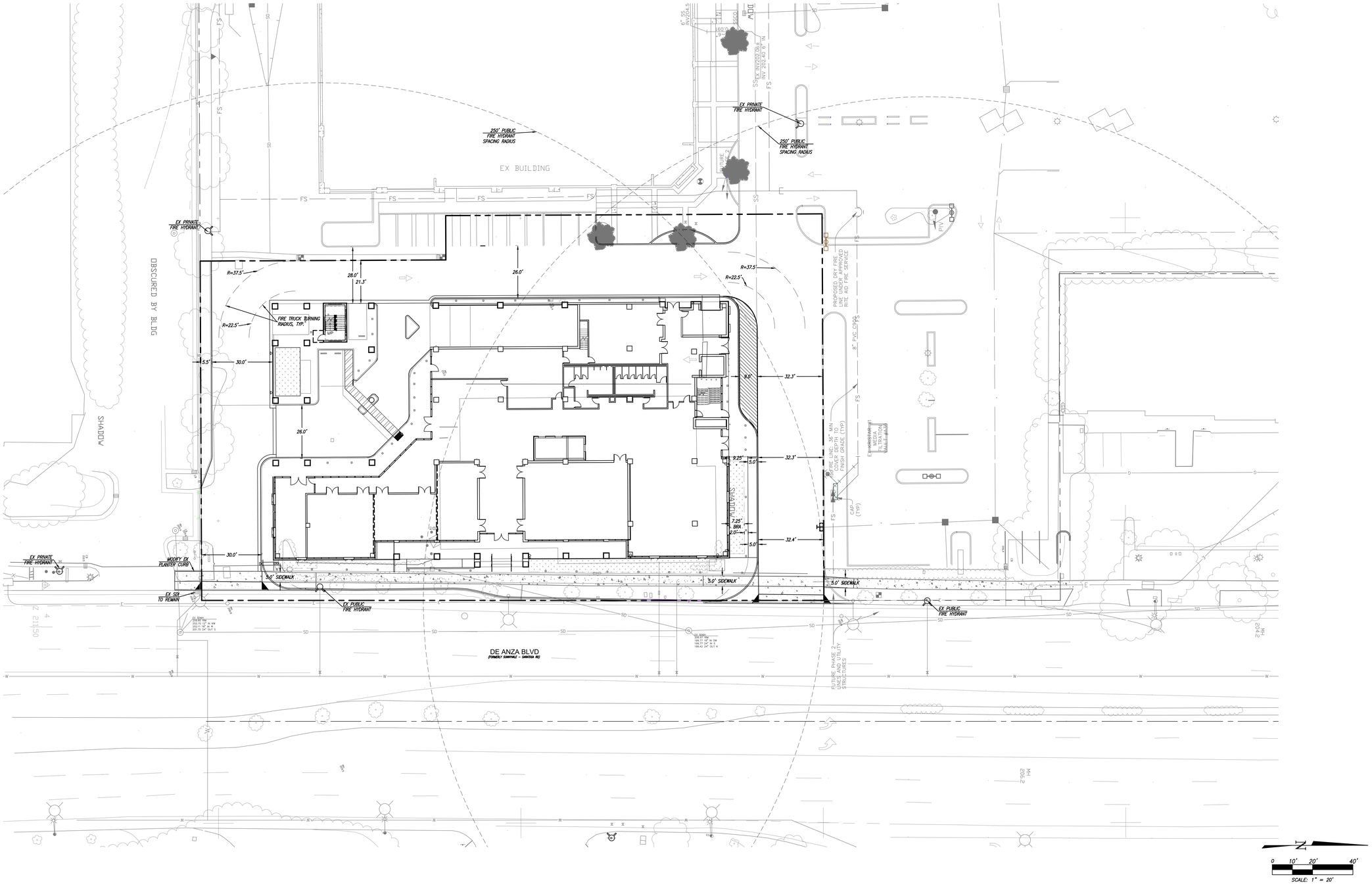

Winkleman Designs
1795 Amaya Ridge Road
Soquel, CA 95073
Tel 408-353-6700
Fax 408-353-4729
bill@winklemandesigns.com

JMH WEISS, INC.
Civil Engineering – Surveying – Land Planning
1731 Technology Drive, Suite 880
San Jose, CA 95110
(408) 286-4555

All drawings and written material appearing herein constitute original and unpublished work of the Designer and may not, without written consent of the Designer, be duplicated, used, or disclosed in whole or in part for design, fabrications, or construction of any building, structure, or improvement, or portion thereof, other than the specific project to which it pertains.

THE DE ANZA

De Anza Properties

10931 N De Anza Blvd, Cupertino, CA

FIRE HYDRANT SITE PLAN

REVISIONS

No.	Date	Description

Date	11/12/18
Sheet Date	11/12/18
Scale	AS-SHOWN
Drawn	OG
Job	5132
Sheet	C1.1

© Winkleman Designs 2018

DWG NAME: P:\5132 - 10931 N De Anza Blvd Hotel-Cupertino\Engineering Plans\Planning\5132 C1.1 SITE PLAN.dwg, LAST EDITED: Mon, Nov 12, 2018 8:40am
USER: ogonnez, AutoCad V20.0s (LMS Tech), Microsoft Windows NT Version 6.1 (x64)

12.04

EX BUILDING

EX FG 210.94

EX TC 211.21

EX TC 211.32

EX TC 210.64

EX TC 210.25

EX FIRE HYDRANT TO REMAIN

MATCH EX TC 211.37

EX FG 210.43

EX SD & VALLEY GUTTER TO REMAIN

EX FG 210.59

EASEMENT FOR ROOF OVERHANG 272 M 5

EX CURB TO REMAIN

EX AC PAVING TO REMAIN

10' SANITARY SEWER EASEMENT 8803 OR 47

20.00 PG&E EASEMENT 8972 OR 657

EX LIGHT & POLE TO BE REMOVED

ROOF OUTLINE ABOVE

HP TC 210.38 FG 209.88

TC 209.98 FG 209.48

TC 210.11 FG 209.61

TC 210.14 FG 209.64

TC 210.31 FG 209.81

TC 210.28 FG 209.78

TC 210.08 FG 209.58

EX SD & SDI TO BE REMOVED

FG 209.32

FG 209.29

NEW 6" CURB

EX AC PAVING TO REMAIN

EX TREE TO REMAIN

EX TREE TO BE REMOVED

SDCO INV 203.48

18 LF 6" PERF PVC SUBDRAIN @ 0.5%

SDI TC 208.93 FL 208.43 INV 203.39

FG 209.18

FG 209.11

TC 210.73

TC 210.65

TC 210.46

TC 210.51

TC 210.49

TC 210.30

TC 210.34

FG 210.48

EX SD & MANHOLE TO BE REMOVED

TC 210.50 FG 210.00±

LIMIT OF NEW PAVING

TC 211.00 FG 210.50

EX TREES TO BE REMOVED

EX TREE TO REMAIN

ROOF OUTLINE ABOVE

88 LF 10" SD @ 0.5%

EX LIGHT & POLE TO BE REMOVED

TC 210.44 FG 210.44

TC 210.22 FG 209.72

TC 210.39 FG 209.89

EX CURB TO BE REMOVED

EX COMMUNICATION LINE TO BE RELOCATED

MATCH EX TC 210.71

TC 210.11 FG 209.61

MATCH EX TC 210.56±

EX JOINT TRENCH & COMMUNICATION TO REMAIN

NEW CONCRETE PAVING

EX TREE TO BE REMOVED

EX SD & SDI TO BE REMOVED

EX TRANSFORMER TO BE REMOVED

NEW RAMP

FG 209.94

4 X 6" STEPS

ROOF DRAIN, TYP.

EX PG&E MH TO REMAIN

EX UTILITY CABINET TO BE RELOCATED

MODIFY EX PLANTER CURB

MATCH EX FG 209.50±

SDMH RIM 209.00 202.95 IN THRU

TC 209.40 FG 208.90

14 LF 6" Ø 0.005

SDI TC 208.65 FL 208.15 INV 203.02

15 LF 6" PERF PVC SUBDRAIN @ 0.5%

SDCO INV 203.10

FG 208.35

EW 208.35

MATCH EX TC 210.21 FG 209.71

EX PG&E VAULT TO REMAIN

EX SDI TO REMAIN

TC 210.02 FG 209.52

TC 209.37 FG 208.87

FG 208.65

5.0' SIDEWALK

30.0' NEW DRIVEWAY

MATCH EX TC 208.61±

EX FIRE HYDRANT TO REMAIN

ROOF ABOVE, TYP.

EX STREET LIGHT TO BE RELOCATED

30 LF 12" SD @ 0.5%

REMOVE & REPLACE EX DRIVEWAY PER CITY STD. DETAIL (1-20)

EX WATER LATERAL TO REMAIN

EX CURB, GUTTER, SIDEWALK & LANDSCAPE TO REMAIN

ROADWAY EASEMENT L584 OR 1245

EX STREET LIGHT TO REMAIN

EX SD TO BE REMOVED

RIGHT-OF-WAY TO BE DEDICATED IN FEE TITLE TO THE CITY OF CUPERTINO (A=4,071± SF)

N00°02'52"E 308.62'

EX SDMH RIM 209.62 201.77 6" IN SW 201.44 8" IN W 201.32 8" OUT E

AC CONFORM

105 LF 8" SD @ 0.5%

EX SS & FS TO REMAIN

EX CURB TO REMAIN

EG 209.36

EG 208.43

EG 207.83

EG 207.59

EG 206.23

EG 206.90

TC 210.26 FG 209.59

TC 210.12 FG 209.45

TC 210.11 FG 209.44

TC 210.23 FG 209.55

SDCO INV 203.42

ROOF OUTLINE ABOVE

EX AC PAVING TO REMAIN

AC CONFORM

EX SDI TO BE REMOVED NEW STORMWATER FILTRATION UNIT RIM 206.23

SDI TC 207.21 FL 206.71 INV 203.18

SDMH RIM 207.20 203.12 IN THRU

EX CURB TO BE REMOVED

MATCH EX TC 207.15±

MATCH EX FG 207.01±

MATCH EX FG. 206.83

5.0' SIDEWALK

32.5'

15'

17.5'

9.0'

NEW DRIVEWAY

REMOVE & REPLACE EX DRIVEWAY PER CITY STD. DETAIL (1-20)

MATCH EX TC 206.86±

MATCH EX TC 206.25±

EX STREET LIGHT TO REMAIN

EX CURB, GUTTER, SIDEWALK & LANDSCAPE TO REMAIN

EX SSMH BURIED

EX SDMH 206.97 RIM 199.77 24" IN S 199.42 24" OUT N

EX WATER LATERAL TO REMAIN

EX WATER LINES TO REMAIN

FF = 210.50
PARK LEVEL 1 = 199.50
PARKING LEVEL 2 = 188.50
PARKING LEVEL 3 = 177.50
PARKING LEVEL 4 = 166.50
PAD = 163.00

NOTE:
POTABLE WATER AND FIRE SUPPRESSION WATER UTILITIES ARE PROPOSED TO REMAIN UNLESS STATED OTHERWISE. SERVICES SHALL BE BROUGHT TO CURRENT JURISDICTIONAL STANDARD WHERE NECESSARY AND COORDINATED WITH CAL WATER.

EX SDMH 209.85 RIM 202.70 12" IN NW 202.11 18" IN W 201.75 24" OUT S

203.25 15" IN

EX SSMH 209.96 RIM 200.22 8" OUT N (ABV THRU FL) 198.27 15" IN W 198.27 18" OUT E

DE ANZA BLVD
(FORMERLY SUNNYVALE – SARATOGA RD)

0 5' 10' 20'
SCALE: 1" = 10'

Winkleman Designs
1795 Amaya Ridge Road
Soquel, CA 95073
Tel 408-353-6700
Fax 408-353-4729
bill@winklemandesigns.com

JMH WEISS, INC.
Civil Engineering ▫ Surveying ▫ Land Planning
1731 Technology Drive, Suite 880
San Jose, CA 95110
(408) 286-4555

© Winkleman Designs 2018
All drawings and written material appearing herein constitute original and unpublished work of the Designer and may not be used without written consent of the Designer. Any unauthorized use, or publication in print or on the web, of these designs, fabrications, or specifications, or any author, inventor, or intercommunication or similar device, other than the specific project for which they were prepared, is prohibited by law without permission.

THE DE ANZA
De Anza Properties
10931 N De Anza Blvd, Cupertino, CA

CONCEPTUAL GRADING, DRAINAGE, & UTILITY PLAN

REVISIONS

No.	Date	Description

Date	11/12/18
Revised Date	11/12/18
Scale	AS-SHOWN
Drawn	OG
Job	5132
Sheet	C2.0

DWG NAME: P:\5132 – 10931 N De Anza Blvd Hotel–Cupertino\Engineering Plans\Planning\5132 C2.0 GRADING & UTILITY PLAN.dwg, LAST EDITED: Mon, Nov 12, 2018 8:53am by BILL (signed), PLOTTED: 11/12/18 (8:56 AM by Marcus), XREFS: Xref Name: 'Boundary' Xref Type: Bound Xref Status: Loaded Xref Path: P:\5132 – 10931 N De Anza Blvd Hotel–Cupertino\Engineering Plans\Planning\Boundary.dwg

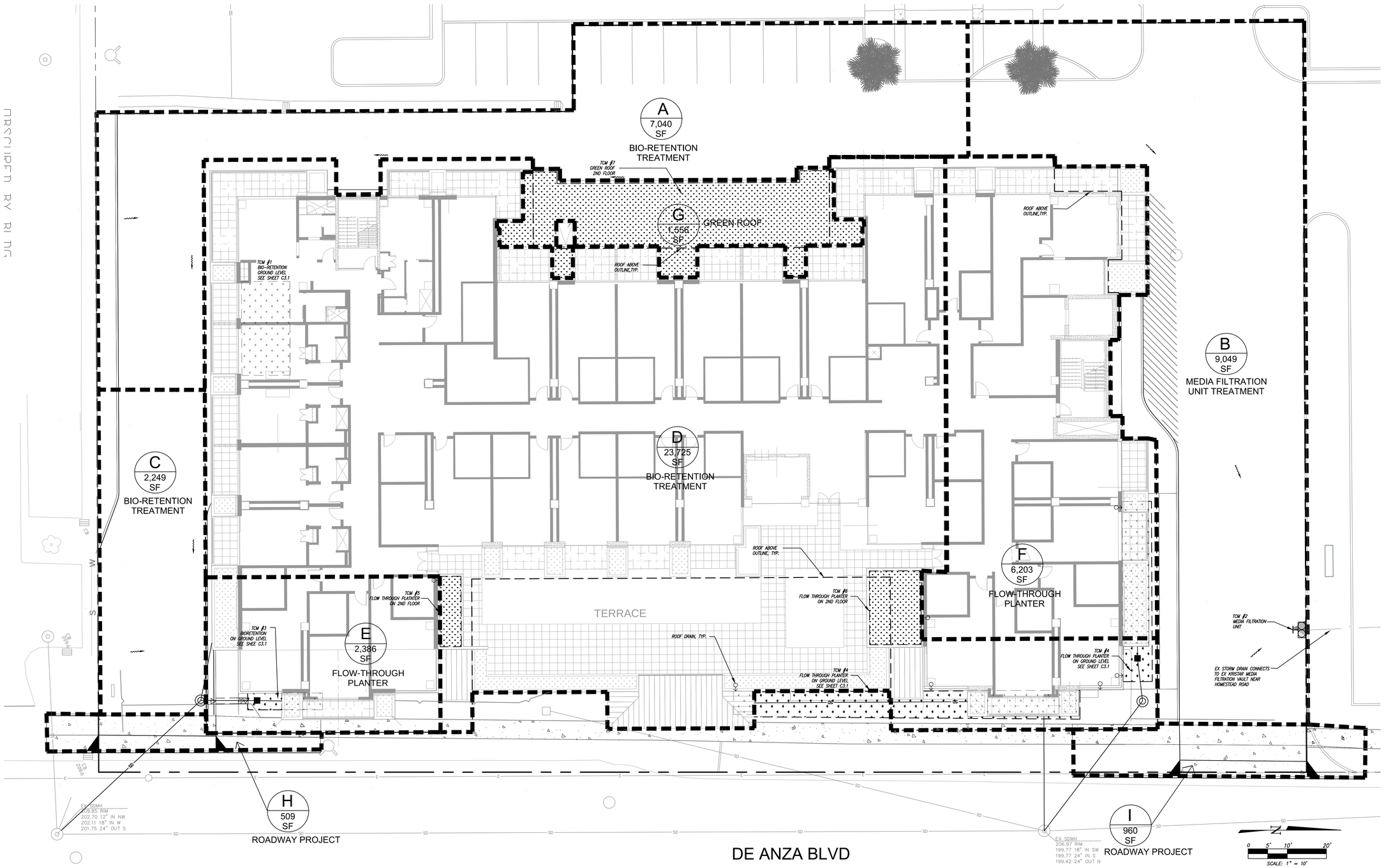

ID AREA	TCM No.	Landscape (sf)	Parking &Sidewalk Area(sf)	Roof Area (sf)	Total Area (sf)	Total Area (acres)	Total Impervious Area (sf)	Treatment Type	Treatment Area Required (sf)	Treatment Area Provided (sf)	Depth of Ponding (in)
A	1	429	6,611	0	7,040	0.16	6,611	Bio-retention	264	296	6
B	2	137	8,912	0	9,049	0.21	8,912	Media Filtration Unit	N/A	N/A	N/A
C	3	168	2,081	0	2,249	0.05	2,081	Bio-retention	83	83	6
D	4	0	0	23,725	23,725	0.54	23,725	Bio-retention	949	950	N/A
E	5	0	0	2,386	2,386	0.05	2,386	Flow-Through Planter	95	98	6
F	6	0	0	6,203	6,203	0.14	6,203	Flow-Through Planter	248	249	6
G	7	1,556	0	0	1,556	0.04	0	Greef Roof	N/A	N/A	N/A
TOTAL		2,290	17,604	32,314	52,208	1.20	49,918		1640	1676	

*New pavement not creating a travel lane and new sidewalk created on an existing street are exempt from C.3 requirements for public roadway projects per Tablr 2-2 of the Chapter 2.3 of thr C.3 Control Handbook (SCVURPPP, April 2012)

ID AREA	TCM No.	Landscape	Parking	Roof	Total	Total	Total	Treatment Type
H	-	0	509	0	509.00	0.01	509	Roadway Project
I	-	0	960	0	960.00	0.02	960	Roadway Project

STANDARD STORMWATER CONTROL NOTES:

- STANDING WATER SHALL NOT REMAIN IN THE TREATMENT MEASURES FOR MORE THAN FIVE DAYS, TO PREVENT MOSQUITO GENERATION. SHOULD ANY MOSQUITO ISSUES ARISE, CONTACT THE SANTA CLARA VALLEY VECTOR CONTROL DISTRICT (DISTRICT). MOSQUITO LARVICIDES SHALL BE APPLIED ONLY WHEN ABSOLUTELY NECESSARY, AS INDICATED BY THE DISTRICT, AND THEN ONLY BY A LICENSED PROFESSIONAL OR CONTRACTOR. CONTACT INFORMATION FOR THE DISTRICT IS PROVIDED BELOW.
- DO NOT USE PESTICIDES OR OTHER CHEMICAL APPLICATIONS TO TREAT DISEASED PLANTS, CONTROL WEEDS OR REMOVED UNWANTED GROWTH. EMPLOY NON-CHEMICAL CONTROLS (BIOLOGICAL, PHYSICAL AND CULTURAL CONTROLS) TO TREAT A PEST PROBLEM. PRUNE PLANTS PROPERLY AND AT THE APPROPRIATE TIME OF YEAR. PROVIDE ADEQUATE IRRIGATION FOR LANDSCAPE PLANTS. DO NOT OVER WATER.

Winkleman Designs
1795 Amaya Ridge Road
Soquel, CA 95073
Tel 408-353-6700
Fax 408-353-4729
bill@winklemandesigns.com

JMH WEISS, INC.
Civil Engineering ~ Surveying ~ Land Planning
1731 Technology Drive, Suite 880
San Jose, CA 95110
(408) 286-4555

All designs and written material appearing herein constitute original and unpublished work of the Designer and may not, without the written consent of the Designer, be published, used, or displayed in whole or in part for design, fabrication, or construction of any building, structure, or improvement, or portion thereof, other than the specific project for which they have been prepared.

THE DE ANZA
De Anza Properties
10931 N De Anza Blvd, Cupertino, CA

CONCEPTUAL STORMWATER MANAGEMENT PLAN SECOND FLOOR

REVISIONS

No.	Date	Description

Date: 11/12/18
Sheet Size: 11/12/18
Scale: AS-SHOWN
Drawn: OG
Job: 5132
Sheet: C3.0

© Winkleman Designs 2018

DWG NAME: P:\5132 - 10931 N De Anza Blvd Vision-Cupertino\Engineering Plans\Planning\5132 C3.0 SWMP- 2ND FLOOR.dwg, LAST EDITED: Mon, Nov 12, 2018 8:42am
USER: dgomez, Autocad V.2018 (LMS Tech), Version: Windows NT Version 6.1 (x64)

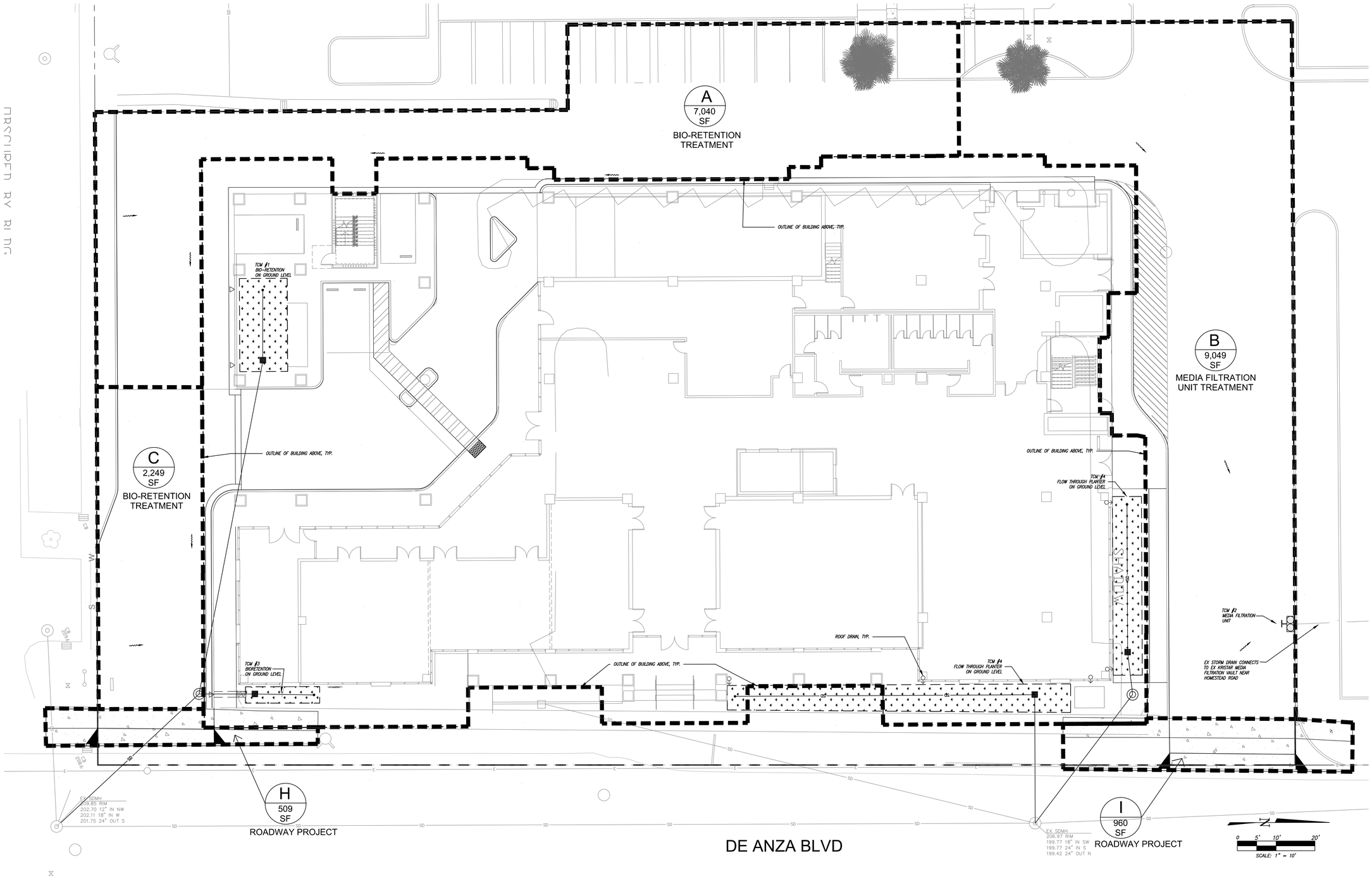

STORM DRAIN INLET NOTES:

1. ALL PROPOSED STORM DRAIN INLETS ONSITE WILL BE FITTED WITH A FULL TRASH CAPTURE STORM DRAIN INLET DEVICE. THIS DEVICE WILL BE SUBMITTED TO AND APPROVED BY THE ENGINEER. THIS DEVICE WILL BE EXPLICITLY DETAILED IN THE OPERATIONS AND MAINTENANCE PLAN TO BE SERVICED NO LESS THAN TWICE ANNUALLY. (SEE DETAIL 3.2)
2. ALL EXTERIOR STORM DRAIN INLETS ON THE PARCEL WILL BE CLEARLY MARKED WITH "NO DUMPING FLOWS TO CREEK" OR NO DUMPING FLOWS TO BAY"

Winkleman Designs
1795 Amaya Ridge Road
Soquel, CA 95073
Tel 408-353-6700
Fax 408-353-4729
bill@winklemandesigns.com

JMH WEISS, INC.
Civil Engineering ~ Surveying ~ Land Planning
1731 Technology Drive, Suite 880
San Jose, CA 95110
(408) 286-4555

All drawings and written material appearing herein constitute original and unpublished work of the Designer and may not, without written consent of the Designer, be published, used, or disclosed in whole or part for design, fabrications, or construction of any building, structure, or improvement or portion thereof, other than the specific project for which it was prepared.

THE DE ANZA
De Anza Properties
10931 N De Anza Blvd, Cupertino, CA

CONCEPTUAL
STORMWATER
MANAGEMENT
PLAN
FIRST FLOOR

REVISIONS

No.	Date	Description

Date	11/12/18
Issue Date	11/12/18
Scale	AS-SHOWN
Drawn	OG
Job	5132
Sheet	C3.1

© Winkleman Designs 2018

DWG NAME: P:\5132 - 10931 N De Anza Blvd Hdm-Cupertino\Engineering Plans\Planning\5132 C3.1 SWMP- 1ST FLOOR.dwg, LAST EDITED: Mon, Nov 12, 2018 8:47am
USER: bgomez, AutoCAD 2012(LMS Tech), Released Release 17 (Version 6.1 (x64))

BIOTREATMENT SOIL REQUIREMENTS

PRIOR TO ORDERING THE BIOTREATMENT SOIL MIX OR DELIVERY TO THE PROJECT SITE, CONTRACTOR SHALL PROVIDE A BIOTREATMENT SOIL MIX SPECIFICATION CHECKLIST, COMPLETED BY THE SOIL MIX SUPPLIER AND CERTIFIED TESTING LAB.

PROJECT SITE INFORMATION:

1. **SOILS TYPE:** D
2. **GROUND WATER DEPTH:** >100'
3. **NAME OF RECEIVING BODY:** SUNNYVALE EAST CHANNEL WATERSHED
4. **FLOOD ZONE:** X
5. **FLOOD ELEVATION (IF APPLICABLE):** N/A

OPERATION AND MAINTENANCE INFORMATION:

I. PROPERTY INFORMATION:

I.A. PROPERTY ADDRESS:
10931 N DE ANZA BLVD , CUPERTINO, CA

I.B. PROPERTY OWNER:
DE ANZA PROPERTIES

J. RESPONSIBLE PARTY FOR MAINTENANCE:

J.A. CONTACT:
DE ANZA PROPERTIES

J.B. PHONE NUMBER OF CONTACT:
(650)-209-3232

J.C. EMAIL:

J.D. ADDRESS:
960 N SAN ANTONIO ROAD, SUITE 114,
LOS ALTOS, CA

SOURCE CONTROL MEASURES:

1. USE WATER EFFICIENT IRRIGATION SYSTEMS
2. GOOD HOUSEKEEPING, E.G., SWEEP PAVEMENT AND CLEAN CATCH BASIN.

3.0BENEFICIAL LANDSCAPING.

4. USE OF WATER EFFICIENT IRRIGATION SYSTEMS.

5. MAINTENANCE (PAVEMENT SWEEPING, CATCH BASIN CLEANING, GOOD HOUSEKEEPING).

6.STORM DRAIN LABELING.

OTHER:

SITE DESIGN MEASURES:

1. PROTECT EXISTING TREES, VEGETATION, AND SOIL.

OTHER:

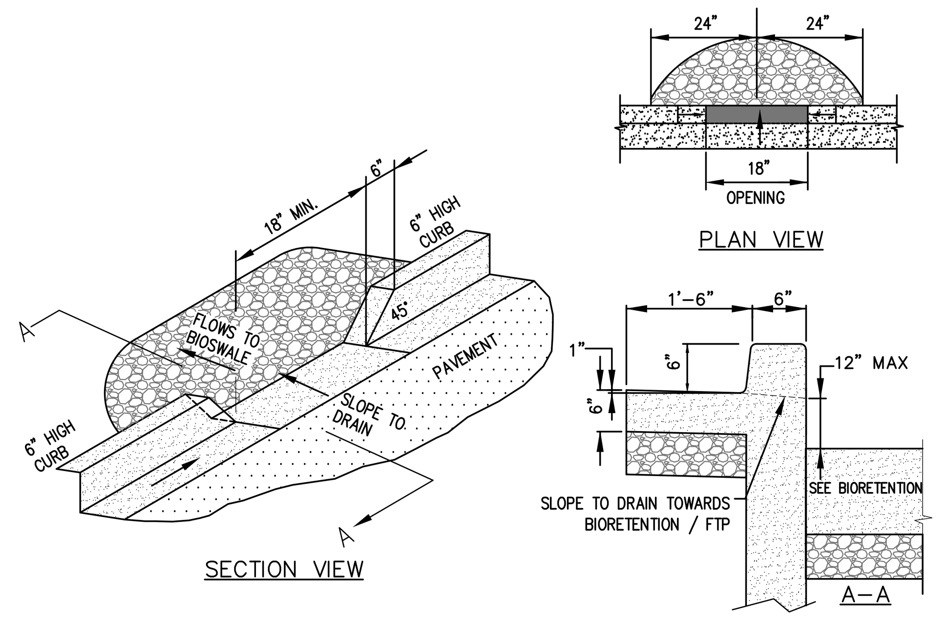

CURB OPENING
N.T.S.

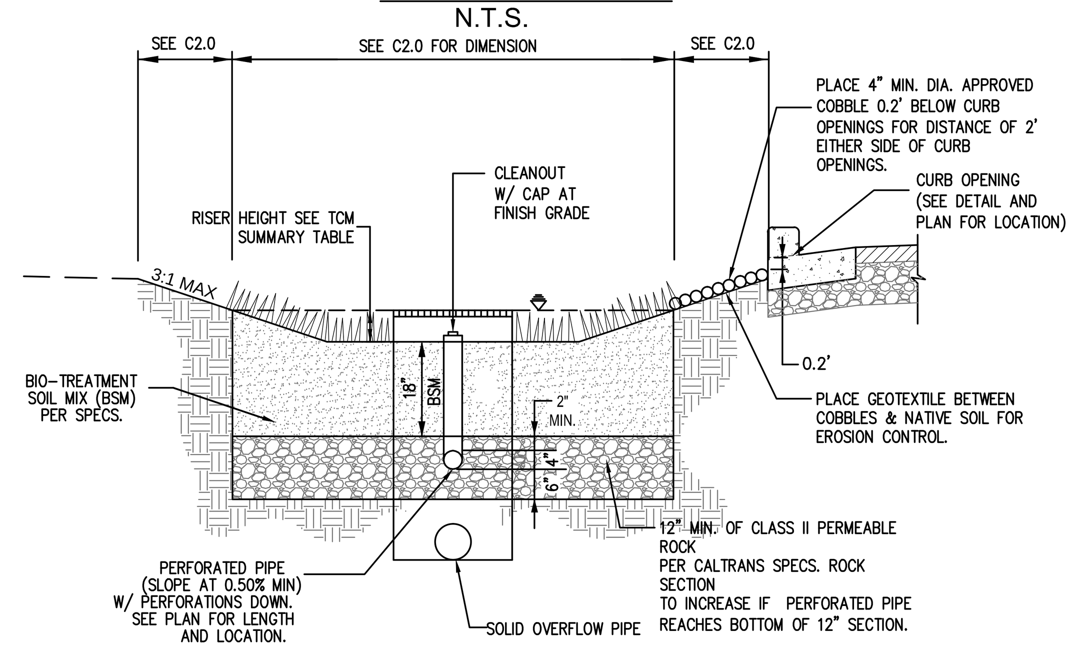

TYPICAL BIORETENTION BASIN W/ LINER
N.T.S.

SIZING METHOD:
4% METHOD

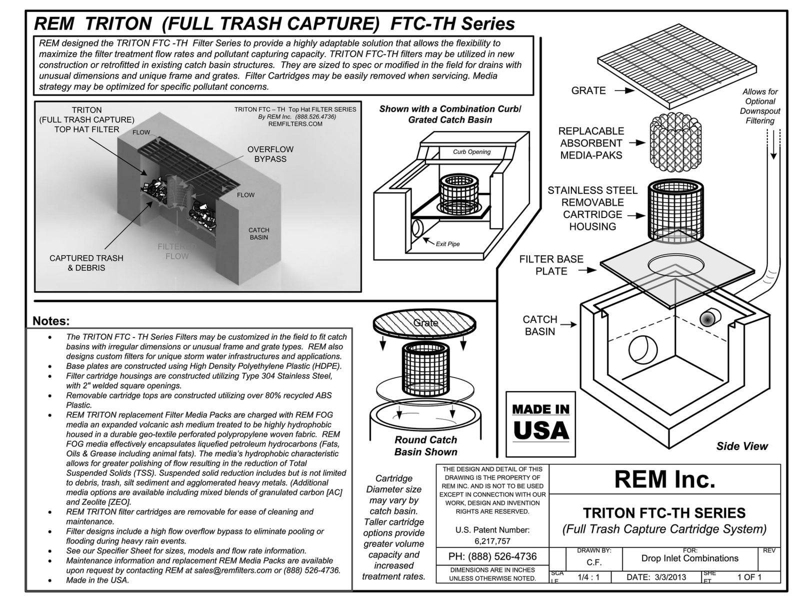

RIM TRITON (FULL TRASH CAPTURE) FTC-TH SERIES DETAIL
SCALE: N.T.S.

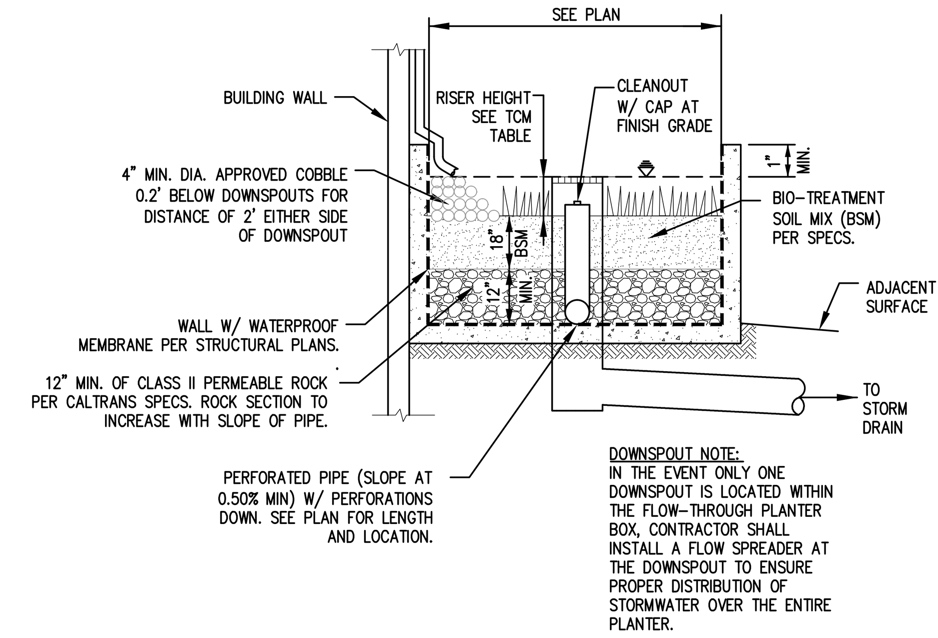

TYPICAL FLOW-THROUGH PLANTER (ABOVE GRADE)
N.T.S.

SIZING METHOD:
4% METHOD

MEDIA FILTER SIZING

DMA # B
A= 9049 s.f. A= 0.20774 acre

C Value	Area* (s.f.)	Weighted C Value
0.9	9,049	0.900
0.8	0	
0.7	0	
0.1	0	

Rainfall Intensity (i)
i = 0.2

* Input Values by hand or use Table at the bottom of the spreadsheet.

Q= C x i x A
Q= 0.0373926 cfs

Manufacturer: Contech
Cartridge Height: 18 in.
Cartidge Media (if applicable): Phosphsorb
G.U.L.D. Cartridge Treatment Flowrate (CTF): 15 gpm/cartridge

\# Cartridges= [Q x (449 gpm/cfs)] / CTF
\# Cartridges = 1.119284 (round up)
 # Cartridges Required= 2
Treatment Flow Rate Capacity= 0.0668151 **cfs**

TABLE 1
ROUTINE MAINTENANCE ACTIVITIES FOR FLOW-THROUGH PLANTERS

NO.	MAINTENANCE TASK	FREQUENCY OF TASK
1	INSPECT THE PLANTER SURFACE AREA, INLETS AND OUTLETS FOR OBSTRUCTIONS AND TRASH; CLEAR ANY OBSTRUCTIONS AND REMOVE TRASH.	QUARTERLY
2	INSPECT PLANTER FOR STANDING WATER. IF STANDING WATER DOES NOT DRAIN WITHIN 2-3 DAYS, THE SURFACE BIOTREATMENT SOIL SHOULD BE TILLED OR REPLACED WITH THE APPROVED SOIL MIX AND REPLANTED. USE THE CLEANOUT RISER TO CLEAR ANY UNDERDRAINS OF OBSTRUCTIONS OR CLOGGING MATERIAL.	QUARTERLY
3	CHECK FOR ERODED OR SETTLED BIOTREATMENT SOIL MEDIA. LEVEL SOIL WITH RAKE AND REMOVE/REPLANT VEGETATION AS NECESSARY.	QUARTERLY
4	MAINTAIN THE VEGETATION AND IRRIGATION SYSTEM. PRUNE AND WEED TO KEEP FLOW-THROUGH PLANTER NEAT AND ORDERLY IN APPEARANCE.	QUARTERLY
5	EVALUATE HEALTH AND DENSITY OF VEGETATION. REMOVE AND REPLACE ALL DEAD AND DISEASED VEGETATION. REMOVE EXCESSIVE GROWTH OF PLANTS THAT ARE TOO CLOSE TOGETHER.	ANNUALLY, BEFORE THE RAINY SEASON BEGINS
6	USE COMPOST AND OTHER NATURAL SOIL AMENDMENTS AND FERTILIZERS INSTEAD OF SYNTHETIC FERTILIZERS, ESPECIALLY IF THE SYSTEM USES AN UNDERDRAIN.	ANNUALLY, BEFORE THE RAINY SEASON BEGINS
7	INSPECT THE OVERFLOW PIPE TO MAKE SURE THAT IT CAN SAFELY CONVEY EXCESS FLOWS TO A STORM DRAIN. REPAIR OR REPLACE ANY DAMAGED OR DISCONNECTED PIPING. USE THE CLEANOUT RISER TO CLEAR UNDERDRAINS OF OBSTRUCTIONS OR CLOGGING MATERIAL.	ANNUALLY, BEFORE THE RAINY SEASON BEGINS
8	INSPECT THE ENERGY DISSIPATOR AT THE INLET TO ENSURE IT IS FUNCTIONING ADEQUATELY, AND THAT THERE IS NO SCOUR OF THE SURFACE MULCH. REMOVE ANY ACCUMULATION OF SEDIMENT.	ANNUALLY, BEFORE THE RAINY SEASON BEGINS
9	INSPECT AND, IF NEEDED, REPLACE WOOD MULCH. IT IS RECOMMENDED THAT 2" TO 3" OF COMPOSTED ARBOR MULCH BE APPLIED ONCE A YEAR.	ANNUALLY, BEFORE THE RAINY SEASON BEGINS
10	INSPECT SYSTEM FOR EROSION OF BIOTREATMENT SOIL MEDIA, LOSS OF MULCH, STANDING WATER, CLOGGED OVERFLOWS, WEEDS, TRASH AND DEAD PLANTS. IF USING ROCK MULCH, CHECK FOR 3" OF COVERAGE.	ANNUALLY AT THE END OF THE RAINY SEASON AND/OR AFTER LARGE STORM EVENTS,
11	INSPECT SYSTEM FOR STRUCTURAL INTEGRITY OF WALLS, FLOW SPREADERS, ENERGY DISSIPATORS, CURB CUTS, OUTLETS AND FLOW SPLITTERS.	ANNUALLY AT THE END OF THE RAINY SEASON AND/OR AFTER LARGE STORM EVENTS,

TABLE 1
ROUTINE MAINTENANCE ACTIVITIES FOR MEDIA FILTERS

NO.	MAINTENANCE TASK	FREQUENCY OF TASK
1	INSPECT FOR STANDING WATER, SEDIMENT, TRASH AND DEBRIS.	MONTHLY DURING RAINY SEASON
2	REMOVE ACCUMULATED TRASH AND DEBRIS IN THE UNIT DURING ROUTINE INSPECTIONS.	MONTHLY DURING RAINY SEASON, OR AS NEEDED AFTER STORM EVENTS
3	INSPECT TO ENSURE THAT THE FACILITY IS DRAINING COMPLETELY WITHIN FIVE DAYS AND PER MANUFACTURER'S SPECIFICATIONS.	ONCE DURING THE WET SEASON AFTER MAJOR STORM EVENT.
4	REPLACE THE MEDIA PER MANUFACTURER'S INSTRUCTIONS OR AS INDICATED BY THE CONDITION OF THE UNIT.	PER MANUFACTURER'S SPECIFICATIONS.
5	INSPECT MEDIA FILTERS USING THE ATTACHED INSPECTION CHECKLIST.	QUARTERLY OR AS NEEDED

TABLE 1
ROUTINE MAINTENANCE ACTIVITIES FOR BIORETENTION AREAS

NO.	MAINTENANCE TASK	FREQUENCY OF TASK
1	REMOVE OBSTRUCTIONS, WEEDS, DEBRIS AND TRASH FROM BIORETENTION AREA AND ITS INLETS AND OUTLETS; AND DISPOSE OF PROPERLY.	QUARTERLY, OR AS NEEDED AFTER STORM EVENTS
2	INSPECT BIORETENTION AREA FOR STANDING WATER. IF STANDING WATER DOES NOT DRAIN WITHIN 2-3 DAYS, TILL AND REPLACE THE SURFACE BIOTREATMENT SOIL WITH THE APPROVED SOIL MIX AND REPLANT.	QUARTERLY, OR AS NEEDED AFTER STORM EVENTS
3	CHECK UNDERDRAINS FOR CLOGGING. USE THE CLEANOUT RISER TO CLEAN ANY CLOGGED UNDERDRAINS.	QUARTERLY, OR AS NEEDED AFTER STORM EVENTS
4	MAINTAIN THE IRRIGATION SYSTEM AND ENSURE THAT PLANTS ARE RECEIVING THE CORRECT AMOUNT OF WATER (IF APPLICABLE).	QUARTERLY
5	ENSURE THAT THE VEGETATION IS HEALTHY AND DENSE ENOUGH TO PROVIDE FILTERING AND PROTECT SOILS FROM EROSION. PRUNE AND WEED THE BIORETENTION AREA. REMOVE AND/OR REPLACE ANY DEAD PLANTS.	ANNUALLY, BEFORE THE WET SEASON BEGINS
6	USE COMPOST AND OTHER NATURAL SOIL AMENDMENTS AND FERTILIZERS INSTEAD OF SYNTHETIC FERTILIZERS, ESPECIALLY IF THE SYSTEM USES AN UNDERDRAIN.	ANNUALLY, BEFORE THE WET SEASON BEGINS
7	CHECK THAT MULCH IS AT APPROPRIATE DEPTH (2 - 3 INCHES PER SOIL SPECIFICATIONS) AND REPLENISH AS NECESSARY BEFORE WET SEASON BEGINS. IT IS RECOMMENDED THAT 2" – 3" OF ARBOR MULCH BE REAPPLIED EVERY YEAR.	ANNUALLY, BEFORE THE WET SEASON BEGINS
8	INSPECT THE ENERGY DISSIPATION AT THE INLET TO ENSURE IT IS FUNCTIONING ADEQUATELY, AND THAT THERE IS NO SCOUR OF THE SURFACE MULCH. REMOVE ACCUMULATED SEDIMENT.	ANNUALLY, BEFORE THE WET SEASON BEGINS
9	INSPECT OVERFLOW PIPE TO ENSURE THAT IT CAN SAFELY CONVEY EXCESS FLOWS TO A STORM DRAIN. REPAIR OR REPLACE DAMAGED PIPING.	ANNUALLY, BEFORE THE WET SEASON BEGINS
10	REPLACE BIOTREATMENT SOIL AND MULCH, IF NEEDED. CHECK FOR STANDING WATER, STRUCTURAL FAILURE AND CLOGGED OVERFLOWS. REMOVE TRASH AND DEBRIS. REPLACE DEAD PLANTS.	
11	INSPECT BIORETENTION AREA USING THE ATTACHED INSPECTION CHECKLIST.	ANNUALLY, BEFORE THE WET SEASON

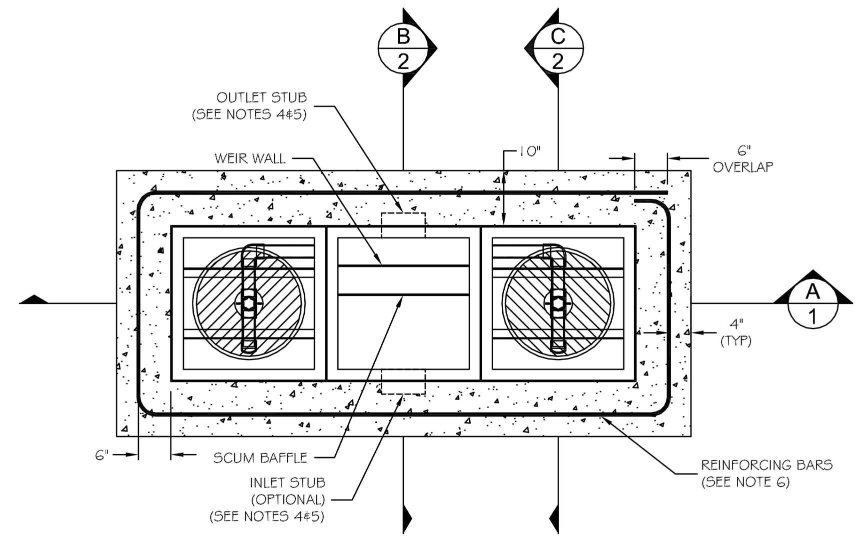

2-CARTRIDGE CATCHBASIN - PLAN VIEW (1/1)

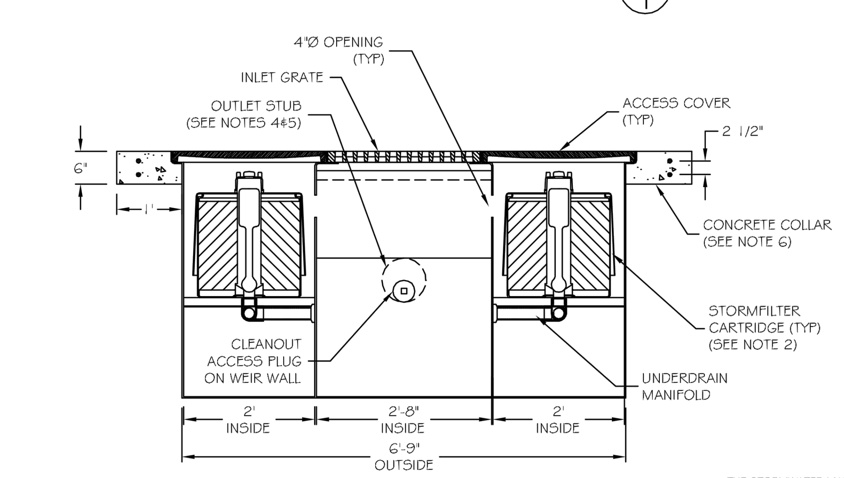

2-CARTRIDGE CATCHBASIN - SECTION VIEW (A/1)

THE STORMWATER MANAGEMENT StormFilter® U.S. PATENT No. 5,322,629, No. 5,707,527, No. 6,027,639 No. 6,649,048, No. 5,624,576, AND OTHER U.S. AND FOREIGN PATENTS PENDING

©2006 CONTECH Stormwater Solutions

CONTECH STORMWATER SOLUTIONS contechstormwater.com

STEEL CATCHBASIN STORMFILTER
PLAN AND SECTION VIEWS
STANDARD DETAIL - 2 CARTRIDGE UNIT

DRAWING 1 — 1/3

DATE: 11/01/05 | SCALE: NONE | FILE NAME: CBSF2-S-DTL | DRAWN: MJW | CHECKED: ARG

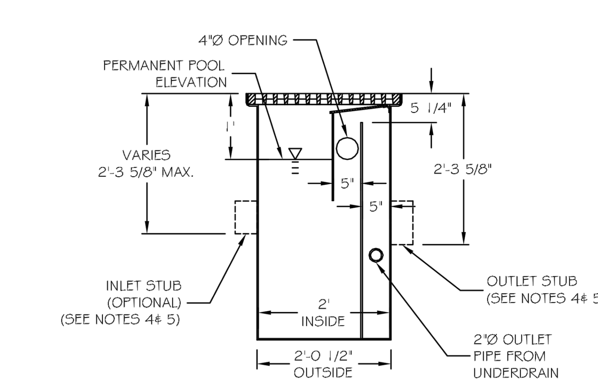

2-CARTRIDGE CATCHBASIN - SECTION VIEW (B/2)

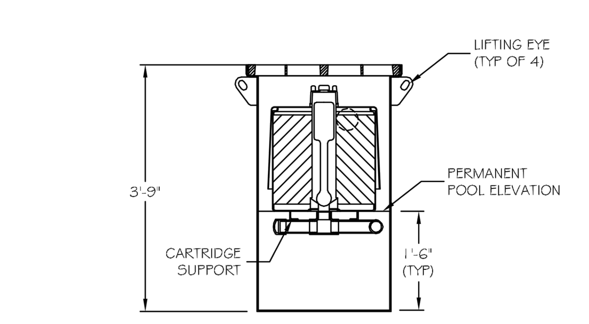

2-CARTRIDGE CATCHBASIN - SECTION VIEW (C/2)

THE STORMWATER MANAGEMENT StormFilter® U.S. PATENT No. 5,322,629, No. 5,707,527, No. 6,027,639 No. 6,649,048, No. 5,624,576, AND OTHER U.S. AND FOREIGN PATENTS PENDING

©2006 CONTECH Stormwater Solutions

CONTECH STORMWATER SOLUTIONS contechstormwater.com

STEEL CATCHBASIN STORMFILTER
SECTION VIEWS
STANDARD DETAIL - 2 CARTRIDGE UNIT

DRAWING 2 — 2/3

DATE: 11/01/05 | SCALE: NONE | FILE NAME: CBSF2-S-DTL | DRAWN: MJW | CHECKED: ARG

GENERAL NOTES

1) STORMFILTER BY CONTECH STORMWATER SOLUTIONS; PORTLAND, OR (800) 548-4667; SCARBOROUGH, ME (877) 907-8676; ELKRIDGE, MD (866) 740-3318.
2) FILTERS TO BE SIPHON-ACTUATED AND SELF-CLEANING.
3) STEEL STRUCTURE TO BE MANUFACTURED OF 1/4 INCH STEEL PLATE.
4) STORMFILTER REQUIRES 2.3 FEET OF DROP FROM RIM TO OUTLET. INLET SHOULD NOT BE LOWER THAN OUTLET. INLET (IF APPLICABLE) AND OUTLET PIPING TO BE SPECIFIED BY ENGINEER AND PROVIDED BY CONTRACTOR.
5) CBSF EQUIPPED WITH 4 INCH (APPROXIMATE) LONG STUBS FOR INLET (IF APPLICABLE) AND OUTLET PIPING. STANDARD OUTLET STUB IS 8 INCHES IN DIAMETER. MAXIMUM OUTLET STUB IS 15 INCHES IN DIAMETER. CONNECTION TO COLLECTION PIPING CAN BE MADE USING FLEXIBLE COUPLING BY CONTRACTOR.
6) FOR H-20 LOAD RATING, CONCRETE COLLAR IS REQUIRED. CONCRETE COLLAR WITH QUANTITY (2) #4 REINFORCING BARS TO BE PROVIDED BY CONTRACTOR.
7) ALL STORMFILTERS REQUIRE REGULAR MAINTENANCE. REFER TO OPERATION AND MAINTENANCE GUIDELINES FOR MORE INFORMATION.

2-CARTRIDGE CATCHBASIN STORMFILTER DATA

STRUCTURE ID	XXX
WATER QUALITY FLOW RATE (cfs)	X.XX
PEAK FLOW RATE (< 1 cfs)	X.XX
RETURN PERIOD OF PEAK FLOW (yrs)	XXX
CARTRIDGE FLOW RATE (15 OR 7.5 gpm)	XX
MEDIA TYPE (CSF, PERLITE, ZPG)	XXXXX
RIM ELEVATION	XXX.XX'

PIPE DATA:	I.E.	DIAMETER
INLET STUB	XXX.XX'	XX"
OUTLET STUB	XXX.XX'	XX"

CONFIGURATION: OUTLET / INLET

SLOPED LID	YES\NO
SOLID COVER	YES\NO
NOTES/SPECIAL REQUIREMENTS:	

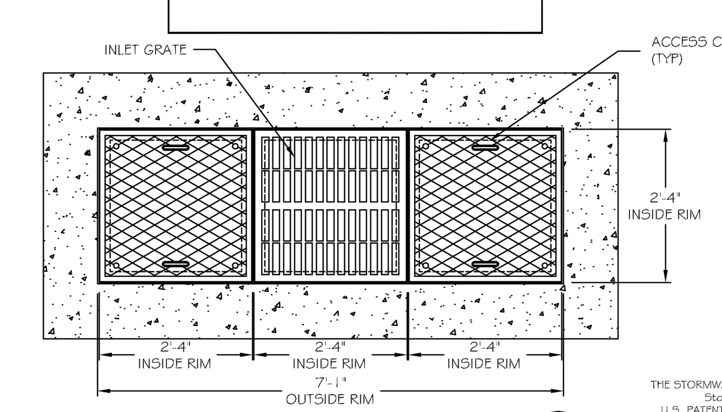

2-CARTRIDGE CATCHBASIN - TOP VIEW (1/3)

THE STORMWATER MANAGEMENT StormFilter® U.S. PATENT No. 5,322,629, No. 5,707,527, No. 6,027,639 No. 6,649,048, No. 5,624,576, AND OTHER U.S. AND FOREIGN PATENTS PENDING

©2006 CONTECH Stormwater Solutions

CONTECH STORMWATER SOLUTIONS contechstormwater.com

STEEL CATCHBASIN STORMFILTER
TOP VIEW, NOTES AND DATA
STANDARD DETAIL - 2 CARTRIDGE UNIT

DRAWING 3 — 3/3

DATE: 11/01/05 | SCALE: NONE | FILE NAME: CBSF2-S-DTL | DRAWN: MJW | CHECKED: ARG

Winkleman Designs
1795 Amaya Ridge Road
Soquel, CA 95073
Tel 408-353-6700
Fax 408-353-4729
bill@winklemandesigns.com

JMH WEISS, INC.
Civil Engineering ~ Surveying ~ Land Planning
1731 Technology Drive, Suite 880
San Jose, CA 95110
(408) 286-4555

All drawings and written material appearing herein constitute original and unpublished work of the Designer and may not, without written consent of the Designer, be duplicated, used, or disclosed in whole or in part for design, fabrications, or construction of any building, structure, or improvement, or portion thereof, other than the specific project to which it pertains.

THE DE ANZA
De Anza Properties
10931 N De Anza Blvd, Cupertino, CA

STORMWATER MANAGEMENT NOTES & DETAILS

REVISIONS

No.	Date	Description

Date: 11/12/18
Sheet Date: 11/12/18
Scale: AS-SHOWN
Drawn: OG
Job: 5132
Sheet: C3.2

© Winkleman Designs 2018

DWG NAME: P:\5132 - 10931 N De Anza Blvd Hotel-Cupertino\Engineering Plans\Planning\5132 C3.2 Stormwater Details & Sections.dwg, LAST EDITED: Mon, Nov 12, 2018 8:49am
USER: ogomez, AutoCad V.20.0s (LMS Tech), Microsoft Windows NT Version 6.1 (x64)

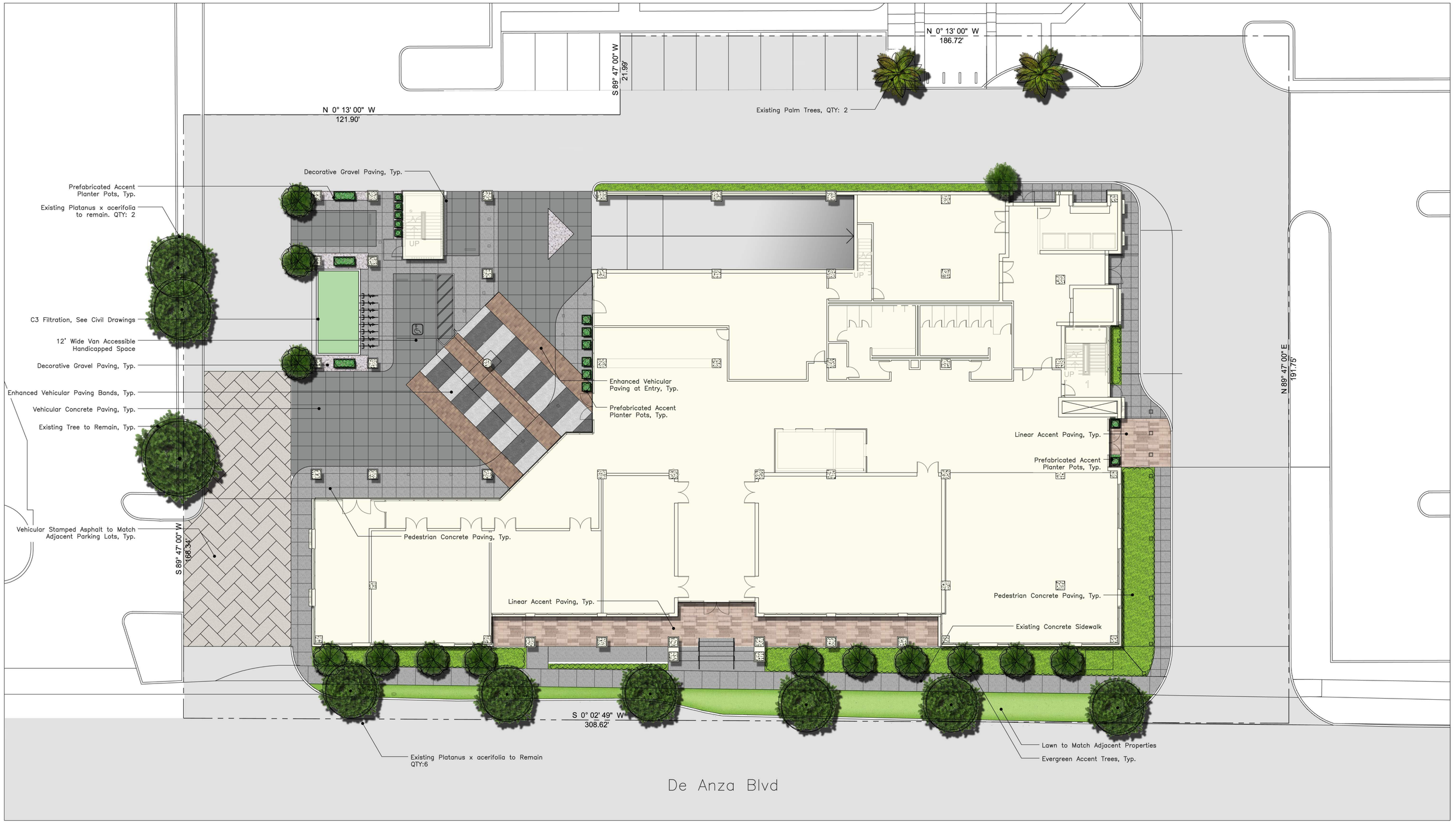

0 5 10 20 40
Scale: 1" = 10'

De Anza Hotel

Cupertino, CA

STREETSCAPE CONCEPTUAL PLAN
11.08.2018
L1

THE GUZZARDO PARTNERSHIP INC.
Landscape Architects · Land Planners
181 Greenwich Street
San Francisco, CA 94111
T 415 433 4672

PLANTING NOTES

1. All work shall be performed by persons familiar with planting work and under supervisions of a qualified planting foreman.
2. Plant material locations shown are diagrammatic and may be subject to change in the field by the Landscape Architect before the maintenance period begins.
3. All trees are to be staked as shown in the staking diagrams.
4. All tree stakes shall be cut 6" above tree ties after stakes have been installed to the depth indicated in the staking diagrams. Single stake all conifers per tree staking diagram.
5. Plant locations are to be adjusted in the field as necessary to screen utilities but not to block windows nor impede access. The Landscape Architect reserves the right to make minor adjustments in tree locations after planting at no cost to the Owner. All planting located adjacent to signs shall be field adjusted so as not to interfere with visibility of the signs.
6. The Landscape Architect reserves the right to make substitutions, additions, and deletions in the planting scheme as felt necessary while work is in progress. Such changes are to be accompanied by equitable adjustments in the contract price if/when necessary and subject to the Owner's approval.
7. The contractor is to secure all vines to walls and columns with approved fasteners, allowing for two (2) years growth. Submit sample of fastener to Landscape Architect for review prior to ordering.
8. All planting areas, except lawns and storm water treatment zones (as defined by the civil engineer), shall be top-dressed with a 3" layer of recycled wood mulch, "Prochip" by BFI (408.888.7632; www.bfi.com) or equal. This shall include all pre-cast planter pots. Mulch shall be Black in color. Submit sample to Landscape Architect for review prior to ordering. Hold all mulch six (6) inches from all plants where mulch is applied over the rootball.
9. All street trees to be installed in accordance with the standards and specifications of the City of Cupertino. Contractor to contact the city arborist to confirm plant type, plant size (at installation), installation detailing and locations prior to proceeding with installation of street trees. Contractor is to obtain street tree planting permit from the city, if a permit is required, prior to installation of street trees. Contractor is to consult with the Landscape Architect during this process.
10. Plants shall be installed to anticipate settlement. See Tree and Shrub Planting Details.
11. All trees noted with 'deep root' and those planted within 5'-0" of concrete paving, curbs, and walls shall have deep root barriers installed per manufacturer's specifications. See specifications and details for materials, depth of material, and location of installation.
12. The Landscape Contractor shall arrange with a nursery to secure plant material noted on the drawings and have those plants available for review by the Owner and Landscape Architect within thirty (30) days of award of contract. The Contractor shall purchase the material and have it segregated and grown for the job upon approval of the plant material. The deposit necessary for such contract growing is to be born by the Contractor.
13. The project has been designed to make efficient use of water through the use of drought tolerant plant materials. Deep rooting shall be encouraged by deep watering plant material as a part of normal landscape maintenance. The irrigation for all planting shall be limited to the amount required to maintain adequate plant health and growth. Water usage should be decreased as plants mature and become established. The irrigation controllers shall be adjusted as necessary to reflect changes in weather and plant requirements.
14. The Landscape Contractor shall verify the location of underground utilities and bring any conflicts with plant material locations to the attention of the Landscape Architect for a decision before proceeding with the work. Any utilities shown on the Landscape drawings are for reference and coordination purposes only. See Civil Drawings.
15. The design intent of the planting plan is to establish an immediate and attractive mature landscape appearance. Future plant growth will necessitate trimming, shaping and, in some cases, removal of trees and shrubs as an on-going maintenance procedure.
16. Install all plants per plan locations and per patterns shown on the plans. Install all shrubs to ensure that anticipated, maintained plant size is at least 2'-0" from the face of building(s) unless shown otherwise on the plans. Refer to Plant Spacing Diagram for plant masses indicated in a diagrammatic manner on the plans. Refer to Plant Spacing Diagram for spacing of formal hedge rows.
17. Contractor to provide one (1) Reference Planting Area for review by Landscape Architect prior to installation of the project planting. The Reference Planting Area shall consist of a representative portion of the site of not less than 900 (nine hundred) square feet. Contractor to set out plants, in containers, in the locations and patterns shown on the plans, for field review by the Landscape Architect. The Reference Planting Area will be used as a guide for the remaining plant installation.
18. The Maintenance Period(s) shall be for 60 (sixty) days. Portions of the installed landscape of a project may be placed on a maintenance period prior to the completion of the project at the Owner's request and with the Owner's concurrence.
19. Contractor to verify drainage of all tree planting pits. See Planting Specifications. Install drainage well per specifications and Tree Planting Detail(s) if the tree planting pit does not drain at a rate to meet the specifications.
20. Contractor shall remove all plant and bar code labels from all installed plants and landscape materials prior to arranging a site visit by the Landscape Architect.
21. Geotech drainage board or approved equal is to be installed in all on-structure planters and all pre-cast planters/pots as shown in the drawings. Material available through: TWE Products, Orinda, CA 925.708.0549. All Geotech board shall be completed covered with filter fabric as shown in the drawings and per manufacturer's specifications.
22. All tree rootballs shall be irrigated by water jet during the sixty (60) day maintenance period established by specifications. This irrigation shall occur each time normal irrigation is scheduled.
23. The Landscape Contractor shall, as a part of this bid, provide for a planting allowance for the amount of $8,000.00 (8 Thousand Dollars) to be used for supplying and installing additional plant material as directed by the Landscape Architect and approved by the Owner in writing. The unused portion of the allowance shall be returned to the Owner at the beginning of the maintenance period.

THE FOLLOWING SIX (6) NOTES ARE FOR BIDDING PURPOSES ONLY

1. The contractor is required to submit plant quantities and unit prices for all plant materials as a part of the bid.
2. Assume 15 gallon plant for any unlabelled or un-sized tree; 5 gallon plant for any unlabelled or un-sized shrub; and 4" pots @ 12" o.c. (not flats) for any unlabelled ground cover. All planting beds, except for lawns, are to receive ground cover plant installation in addition to the shrubs and trees shown on the plans.
3. The planting areas shall be ripped to a depth of 8" to reduce compaction. The native subgrade soil shall be treated with 100 lbs of gypsum/1000 sf and leached to improve drainage and reduce the soil interface barrier. Contractor shall coordinate this work with other trades. This is subject to the final recommendations of the soils test (see below) and review by the Landscape Architect and the Owner.
4. All planting areas are to receive Super Humus Compost by BFI (408.945.2844; www.bfi.com) at the rate of 6 cubic yards/1000 square feet, evenly tilled 6" deep into the soil to finish grade. All planting areas shall have 6-20-20 Commercial Fertilizer at 25lbs/1000 square feet evenly distributed into the soil. This is subject to the final recommendations and review of the soils test (see below) by the Landscape Architect and the Owner.
5. Planting pits are to be backfilled with a mixture of 50% native soil and 50% amended native soil.
6. The General Contractor is to provide an agricultural suitabilities analysis for on-site rough graded soil and any imported topsoil. Recommendations for amendments contained in this analysis are to be carried out before planting occurs. Such changes are to be accompanied by equitable adjustments in the contract price if/when necessary. See specifications for testing procedure.

PLANT SPACING DIAGRAM

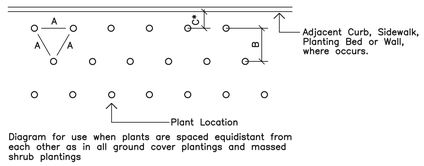

Diagram for use when plants are spaced equidistant from each other as in all ground cover plantings and massed shrub plantings

PLANT CALLOUT SYMBOL

PLANT QUANTITY DIAGRAM

SPACING 'A'	SPACING 'B'	SPACING 'C'	NO. OF PLANTS/SQUARE FOOT
6" O.C.	5.20"	2.60"	4.60
8" O.C.	6.93"	3.47"	2.60
9" O.C.	7.79"	3.90"	1.78
10" O.C.	8.66"	4.33"	1.66
12" O.C.	10.40"	5.20"	1.15
15" O.C.	13.00"	6.50"	0.74
18" O.C.	15.60"	7.80"	0.51
24" O.C.	20.80"	10.40"	0.29
30" O.C.	26.00"	13.00"	0.18
36" O.C.	30.00"	15.00"	0.12
48" O.C.	40.00"	20.00"	0.07
72" O.C.	62.35"	31.18"	0.04

See Plant Spacing Diagram for maximum triangular spacing 'A'. This chart is to be used to determine number of ground cover required in a given area and spacing between shrub massings. Where shrub massings are shown, calculate shrub mass areas before utilizing spacing chart to determine plant quantities.

* Where curb, sidewalk, adjacent planting bed or wall condition occurs, utilize spacing 'C' to determine plant distance from wall, sidewalk, adjacent planting bed or back of curb, where C=1/2 B.

PLANT PALETTE

KEY	SIZE	BOTANICAL NAME	COMMON NAME	SPACING/NOTES	WUCOLS	CA NATIVE
TREES	* For Tree Sizes See Planting Plans.					
ARB MAR	*	Arbutus 'Marina'	Marina Strawberry Tree		L	
BAM ALF	*	Bambusa m. 'Alphonse Karr'	'Alphonse Karr' Bamboo		L	
BAM TEX	*	Bambusa 'Textilis'	Timber Bamboo		L	
CAR FAS	*	Carpinus betulus 'Fastigata'	Pyramidal European Hornbean		M	
CHA HUM	*	Chamaerops humilis	Mediterranean Fan Palm		L	
CS	15 gal	Cupressus sempervirens	Italian Cypress		L	
FRA AME	*	Fraxinus americana 'Autumn Purple'	Autumn Purple Ash		M	
GIN BIL	*	Ginkgo biloba 'Fairmount'	Maindenhair Tree		M	
LAG NAT	*	Lagerstroemia 'Natchez'	Crepe Myrtle		L	
LIR TUL	*	Liriodendron tulipifera	Tulip Tree		M	
OLE EUR	*	Olea europea 'Swan Hill'	Olive Tree	Multi Trunk	L	
PIS CHI	*	Pistacia chinensis	Chinese Pistache		L	
PLA COL	*	Platanus acerfolia 'Columbia'	London Plane Tree		M	
POD GRA	15 gal	Podocarpus gracilior	Fern Pine		M	
PRU AKE	*	Prunus akebono	Akebono Cherry		M	
PYR CAL	*	Pyrus c. 'Aristocrat'	Flowering Pear		M	
QUE AGR	*	Quercus agrifolia	Coast Live Oak		VL	NATIVE
QUE FRA	*	Quercus frainetto 'Schnidt'	Hungarian Oak		L	
QUE LOB	*	Quercus lobata	Valley Oak		L	NATIVE
QUE VIR	*	Quercus virginiana	Live Oak		M	
SEQ SEM	*	Sequoia s. 'Aptos Blue'	Redwood		H	NATIVE
TRI LAU	*	Tristaniopsis laurina	Water Gum		M	
SHRUBS						
AN	1 gal	Anemone hybrida 'White'	Japanese Anemone	24" oc	M	
ABG	5 gal	Anigozanthos 'Bush Gold'	Yellow Kangaroo Paw	24" oc	L	
BS	5 gal	Buxus s. 'Green Beauty'	Boxwood	24" oc	M	
CE	5 gal	Ceanothus 'Concha'	California Lilac	48" oc	VL	NATIVE
CR	5 gal	Cycas revoluta	Sago Cycad	36" oc	M	
DB	5 gal	Dietes Bicolor (s)	Fortnight Lily	36" oc	L	
EM	15 gal	Elaeagnus 'Maculata'	Golden Elaeagnus	60" oc	L	
EC	5 gal	Euphorbia c. 'Wulfenii'	Euphorbia	30" oc	L	
EF	5 gal	Escallonia Fradesii 'Pink Whisper'	Escallonia 'Pink Whisper'	42" oc	M	
HM	5 gal	Hypericum moseranum	Gold Flower	42" oc	M	
HME	5 gal	Hydrangea m. 'Endless Summer'	Hydrangea	36" oc	M	
HP	5 gal	Hesperaloe parvifolia	Red Yucca	36" oc	/	
LB	5 gal	Lavatera t. 'Barnsley'	Tree Mallow	48" oc	L	
LL	5 gal	Leonotis leonuris	Lion's Tail	36" oc	L	
LC	5 gal	Loropetalum c .'Blush'	Red Fringe Flower	36" oc	L	
OL	5 gal	Olea e. 'Little Ollie'	Dwarf Olive	36" oc	VL	
PA	5 gal	Phormium 'Firebird'	New Zealand Flax	36" oc	L	
PD	5 gal	Phormium 'Dusky Chief'	New Zealand Flax	36" oc	L	
PY	5 gal	Phormium 'Yellow Wave'	New Zealand Flax	36" oc	L	
PRS	5 gal	Phormium 'Rainbow Sunrise'	New Zealand Flax	30" oc	L	
PRW	5 gal	Phormium 'Rainbow Warrior'	New Zealand Flax	30" oc	L	
PC	5 gal	Prunus caroliana	Carolina Cherry Laurel	48" oc	L	
PL	5 gal	Prunus laurocerasus	English Laurel	48" oc	M	
RB	5 gal	Rhaphiolepis indica 'Ballerina'	Indian Hawthorne	36" oc	L	
RH	5 gal	Rhamnus californica	Coffeeberry	48" oc	L	NATIVE
RS	5 gal	Rosa 'White Simplicity'	White Simplicity Rose	42" oc	M	
RT	5 gal	Rosmarinus 'Tuscan Blue'	Tuscan Blue Rosemary	36" oc	L	
SR	5 gal	Strelitzia reginae	Bird of Paradise	36" oc	M	
SLB	5 gal	Salvia leucantha 'Santa Barbara'	Mexican Sage	36" oc	L	
RHA	5 gal	Rhaphiolepis indica 'Clara'	Indian Hawthorn	36" O.C.	L	
GROUNDCOVER						
ARC	5 gal	Arctostaphylos 'Pacific Mist'	Manzanita	48" oc	VL	NATIVE
CEA	5 gal	Ceanothus g. h. 'Yankee Point'	Yankee Point Ceanothus	30" oc	L	NATIVE
CPS	5 gal	Coleonema p. 'Sunset Gold'	Dwarf Breath of Heaven	20" oc	M	
CDP	5 gal	Coprosma p. 'Verde Vista'	Coprosma	36" oc	L	
LAV	5 gal	Lavandula intermedia	Lavender	24" oc	L	NATIVE
LIR	1 gal	Liriope m. 'Big Blue'	Lily Turf	18" oc	M	
MAH	5 gal	Mahonia repens	Creeping Mahonia	30" oc	L	NATIVE
RSC	5 gal	Rosa 'Flower Carpet Amber'	Amber Carpet Rose	36" oc	M	
SBR	1 gal	Stachys byzantina	Lamb's Ear	24" oc	M	
TEU	1 gal	Teucrium x lucidrys	Dwarf Germander	24" oc	L	
TJA	5 gal	Trachelospermum jasminoides	Star Jasmine	36" o.c.	M	
CUP	1 gal	Cuphea hyssopifolia	Mexican Heather	24" O.C.	M	
EUO	1 gal	Euonymus fortunei	Wintercreeper	24" O.C.	L	
GRASSES						
CDI	5 gal	Carex tumulicola	Berkeley Sedge	24" oc	M	
CKF	5 gal	Calamagrostis 'Karl Foerster'	Feather Reed Grass	30" oc	L	
CNU	1 gal	Calamagrostis nukaensis	Pacific Reed Grass	24" oc	L	NATIVE
CTF	5 gal	Chondropetalum tectorum (s)	Cape Rush	24" oc	L	
LCP	1 gal	Leynus c. 'Canyon Prince'	Canyon Prince Wild Rye	30" oc	L	
JPE	5 gal	Juncus patens 'Elk Blue' (s)	California Gray Rush	18" oc	L	NATIVE
MCR	5 gal	Muhlenbergia c. 'Regal Mist' (s)	Pink Muhly	36" oc	L	
MRI	5 gal	Muhlenbergia rigens (s)	Deergrass	36" oc	L	NATIVE
OJ	1 gal	Ophiopogon japonicus	Black Mondo Grass	18" oc	M	
STT	5 gal	Stipa tenuissima	Mexican Feather Grass	24" oc	L	
FEB *	2 gal	Festuca glauca 'Elijah Blue'	Blue Fescue	18" oc	L	
FERNS						
NC	5 gal	Nephrolepis cordifolia	Southern Sword Fern	36" oc	M	
PM	5 gal	Polystichum munitum	Western Sword Fern	30" oc	M	NATIVE
VINES						
BG	5 gal	Bougainvillea 'California Gold'	Bougainvillea		L	
CC	5 gal	Clytostoma callistigioides	Violet Trumpet Vine		M	
FP	1 gal	Ficus pumila	Creeping Fig		M	
PT	1 gal	Parthenocissus tricuspidata	Boston Ivy		M	
RSJ	5 gal	Rosa 'Joseph's Coat'	Joseph's Coat Rose		M	
PERENNIALS						
AC	1 gal	Annual Color		16" oc	/	
CAL	1 gal	Calibrachoa 'Noa'	Purple Million Bells	18" oc	/	
NEP	1 gal	Nepeta faassenesii 'Giant'	Catmint	24" oc	L	
LAWN						
DBP	SOD	Bolero Plus	Delta Bluegrass		M	
NMF	SOD	No mow fescue	Delta sod fescue		M	

PLANTING DESIGN NOTES: The above plants have been selected as being representative of the overall planting design intent. This plant palette is suggested for use, but does not preclude use of other appropriate plant material. Water-conserving plants and other climate appropriate varieties of trees, shrubs and ground covers have been selected to complement the character of the project, both along the public frontages and within the private podium courtyards. The planting design intentionally "layers" the project perimeters to help soften the Building. Plant quantities listed are approximate.

All planted areas are to be watered with an approved automatic underground irrigation system. The system shall be designed to make efficient use of water through conservation techniques, and be in compliance with the State and Water District's water conservation ordinance.

The final construction documents will provide the contractor with an understanding of the design intent for the maintenance of the planting areas regarding care and pruning of the site. The maintenance contractor shall furnish all labor, equipment, materials and supervision required to properly maintain the landscaped areas in an attractive condition and as described in the project maintenance specifications.

**NOTE: This plant palette is suggested for use, but does not preclude use of other appropriate plant material. Water-conserving plants and other climate appropriate varieties of trees, shrubs and ground covers have been selected to complement the character of the project.

LANDSCAPE SOIL SPECIFICATION GUIDELINES

PHYSICAL PROPERTIES

USDA classification of fraction passing 2.0 mm sieve:
Designation: sandy loam, sandy clay loam, clay loam or loam.

Class	Particle size range	maximum, %	minimum, %
Coarse sand	0.5 – 2.0 mm	15	0
Silt plus clay	<0.05 mm	70	30
Silt	0.002 – 0.05 mm	40	10
Clay	0 – 0.002 mm	35	10
Other classes			
Gravel	2 – 13 mm	20	0
Rock	None > 1/2 inch	10% by volume	with none > 1 inch
Organic		15%	0
Organic (Amended Soil)		10%	3%

CHEMISTRY – SUITABILITY CONSIDERATIONS
1. SALINITY: Saturation Extract Conductivity (ECe) Less than 4.0 dS/m @ 25û C.
2. SODIUM: Sodium Absorption Ratio (SAR) Less than 6.0
3. BORON: Saturation Extract Concentration Less than 1.0 ppm
4. REACTION: pH of Saturated Paste 5.5 – 7.5

FERTILITY CONSIDERATIONS
Soil to contain sufficient quantities of available nitrogen, phosphorus, potassium, calcium and magnesium to support normal plant growth. In the event of nutrient inadequacies, provisions shall be made to add required materials prior to planting. See planting notes.

INFILTRATION RATE

Inches/Hour	maximum	minimum
Amended Soil	0.45	0.20

De Anza Hotel

Cupertino, CA

NOTES & SPECIFICATIONS
11.08.2018
L2

THE GUZZARDO PARTNERSHIP INC.
Landscape Architects · Land Planners
181 Greenwich Street
San Francisco, CA 94111
T 415 433 4672
F 415 433 5003

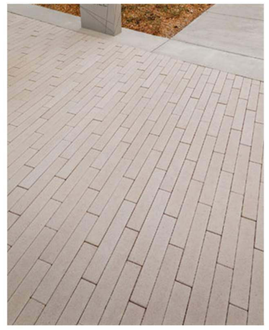

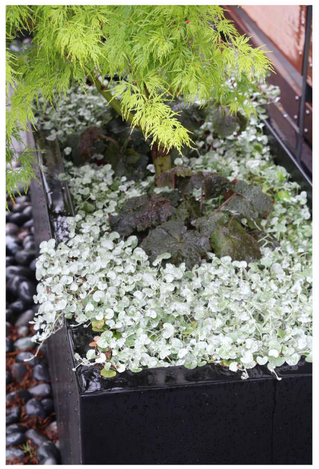
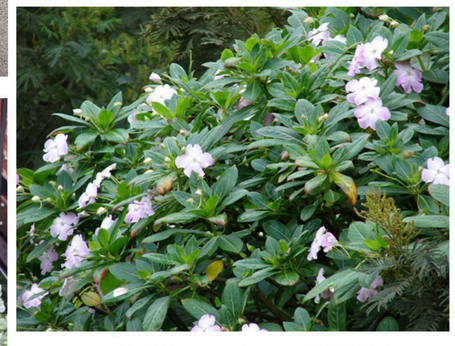

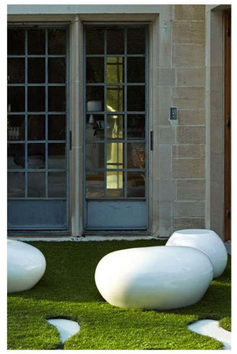
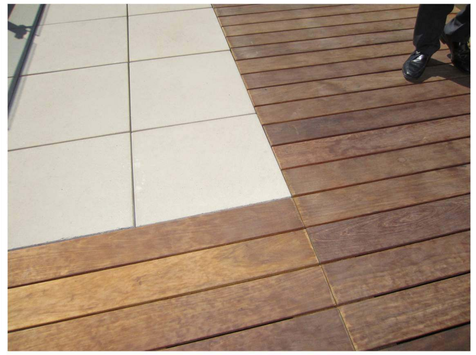

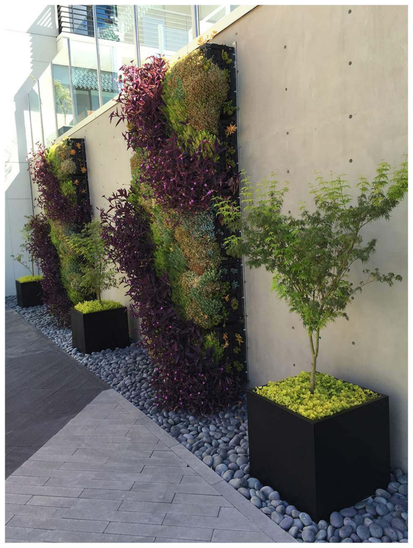

De Anza Hotel

Cupertino, CA

LANDSCAPE IMAGERY
11.08.2018
L3

THE GUZZARDO PARTNERSHIP INC.
Landscape Architects · Land Planners
181 Greenwich Street
San Francisco, CA 94111
T 415 433 4672

TREE DISPOSITION LEGEND

Existing Trees to Remain. To be Coordinated with Civil Engineer and Proposed Grading Plan.

NOTE: All Existing On-Site Trees are to Remain.

Tree Disposition Table

Total Existing On-Site Trees	**11**
to Remain	**11**
to be Removed	**0**
to be Transplanted	**0**
Replacement Trees Proposed (24" Box Size or Greater)	**14**

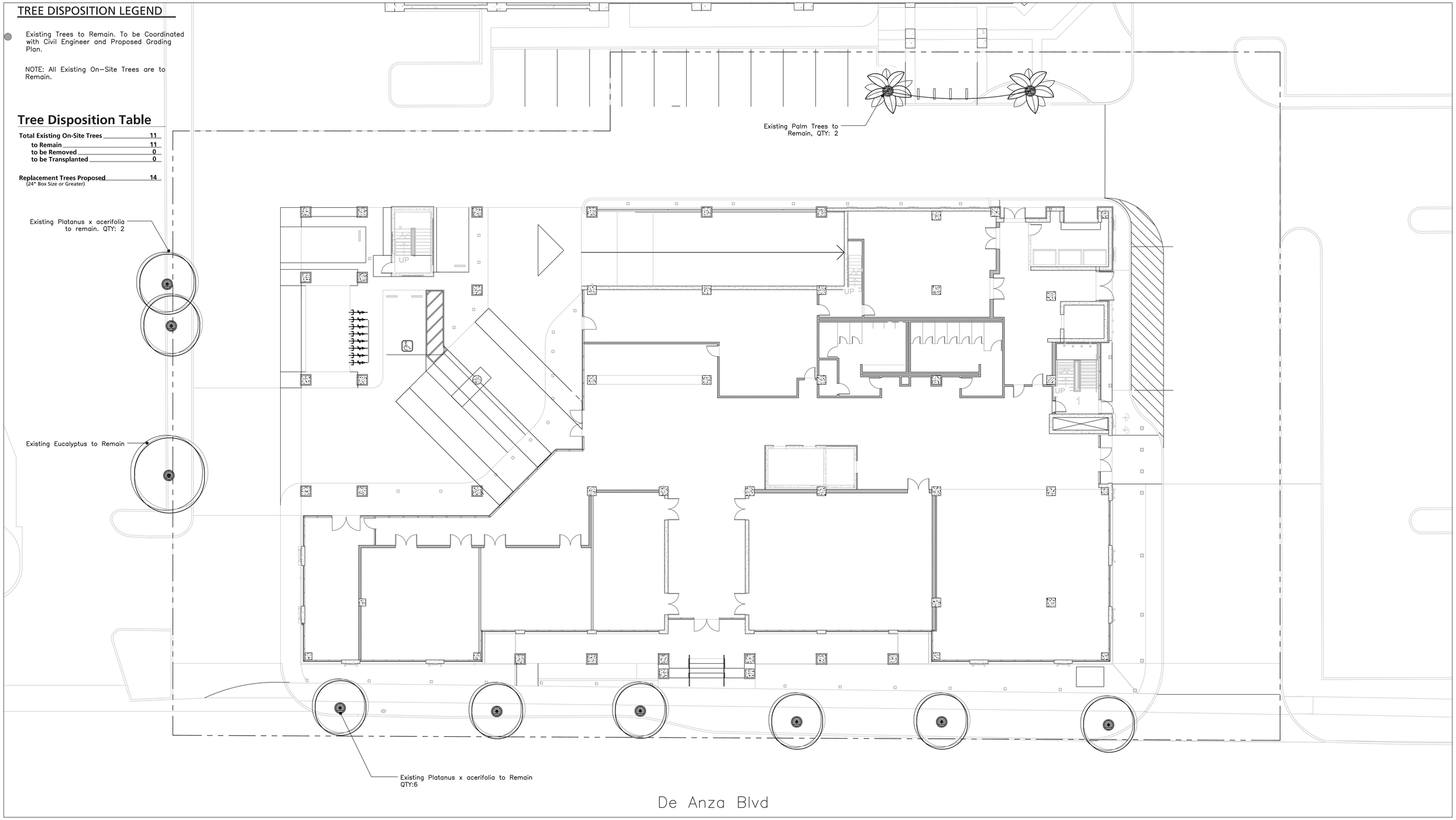

0 5 10 20 40
Scale: 1" = 10'

De Anza Hotel

Cupertino, CA

TREE DISPOSITION PLAN
11.08.2018
L4

THE GUZZARDO PARTNERSHIP INC.
Landscape Architects · Land Planners
181 Greenwich Street
San Francisco, CA 94111
T 415 433 4672
F 415 433 5003